JUKI®

No. 0006-03
1982・5
BE815NT0PJA

# model MO-800

サブクラス
SUBCLASSES

インターロックミシン

Safety stitch sewing machine

# PARTS BOOK

MO-815
MO-816
MO-840

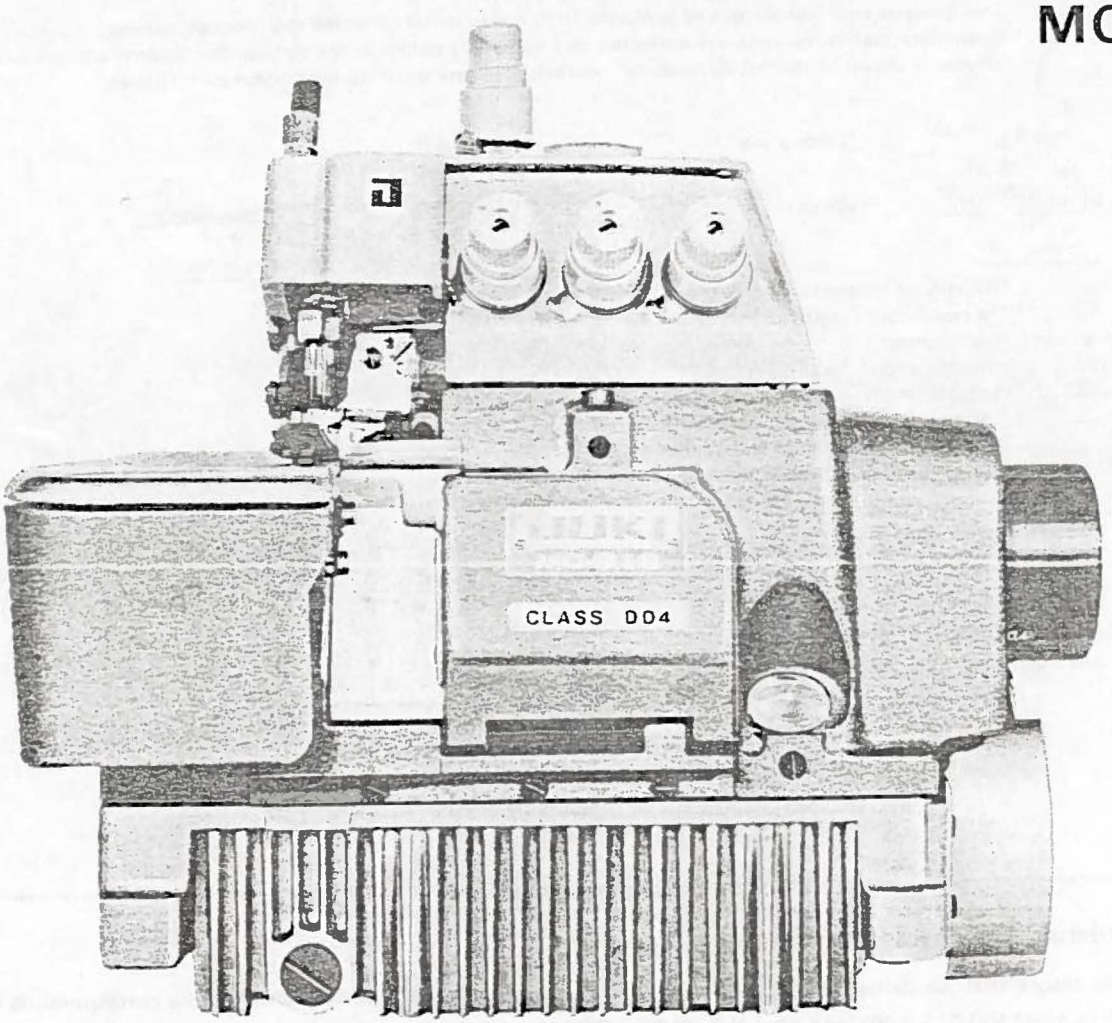


TOKYO JUKI INDUSTRIAL CO., LTD.

From the library of: Superior Sewing Machine & Supply LLC

# HOW TO MAKE USE OF THIS PARTS BOOK

1. As a basic principle, this parts book is divided into various sections according to the functions of respective parts.
2. The part numbers of parts shown in the figure indicate the corresponding numbers(Ref.No.) shown by the Index.
3. Explanation of codes
   1) ① ☆ mark ..... means this part is changed from the previous parts book.
      ② ◊01 ..... refer to "Note" explanation at bottom of page.
   2) Codes on the "E.C. (Engineering change)" column
      ① A.10/74 ..... Added from October, 1974
      ② D.1/75..... Obsoleted from January, 1975
      ③ When D.(obsoleted) and A.(added) are indicated together
      D.12/74
      A.12/74
      ⓐ When previous parts (Obsoleted part) and new parts (Added parts) are not interchangeable with each other:
      In this case, even obsoleted parts(D.) can be ordered with the obsoleted part number, so select the parts with changed dates and place your orders.

(Example)

| Ref. No. | Note 注記 | Part No. 品番 | Description | E.C. 変更年月 | 品名 | Amt. Req. 数量 |
|---|---|---|---|---|---|---|
| 1 | ☆ | B1401-100-000 | Needle bar | D.12/74 | ハリボー | – |
| 1-1 | ☆ | B1401-100-000-A | Needle bar | A.12/74 | ハリボー | 1 |

ⓑ In case when previous parts and new part are interchangeable with each other:
In this case the new part number is replaced on the "品名(Japanese" column of the previous parts, so please order by the new part number.

(Example)

| Ref. No. | Note 注記 | Part No. 品番 | Description | E.C. 変更年月 | 品名 | Amt. Req. 数量 |
|---|---|---|---|---|---|---|
| 1 | ☆ | B1105-200-000 | Frame cover | D.12/74 | B1105-300-000 | – |
| | ☆ | B1105-300-000 | Frame cover | A.12/74 | フレームカバー | 1 |

④ C.3/75 ..... This indicates error was discovered in March, 1975 and so it was corrected to a new part number.
Please note that in this case, the corrected part number is shown in the part number column and the wrong part number is shown in the "品名(Japanese" column, so please order by the correct part number.

(Example)

| Ref. No. | Note 注記 | Part No. 品番 | Description | E.C. 変更年月 | 品名 | Amt. Req. 数量 |
|---|---|---|---|---|---|---|
| 1 | ☆ | B1105-500-000 ↑ Correct No. | Frame cover | C.3/75 | ~~B1105-600-000~~ ↑ Wrong No. | 1 |

⑤ M.5/75 ..... The amount required is changed from March, 1975
The new amount required is shown in the "Amt. Req." column.

3) Codes on the "Amt. Req." column
   ① 2 ..... Indicates amount required is 2.
   ② 2.0 ..... Indicates length in meters. (unit is meter)
   ③ – ..... Indicates parts obsoleted from the parts book.
   ④ (1) ..... Indicates sub parts which construct the assembly part.
   Assembly part is shown as "asm." and クミ in Japanese, in the "Description" column.

(Example)

| Ref. No. | Note 注記 | Part No. 品番 | Description | E.C. 変更年月 | 品名 | Amt. Req. 数量 |
|---|---|---|---|---|---|---|
| 10 | | B1105-900-0A0 | Frame cover asm. | | フレームカバー クミ | 1 |
| 11 | | B1105-900-000 | Frame cover | | フレームカバー | (1) |
| 12 | | SS-8110310-SP | Screw 11/64-40 L=2.8 | | トメネジ 11/64-40 L=2.8 | (2) |

**When Ordering The Spare Parts:**

In order to ensure that we deliver the correct parts to you, please clearly state when ordering the corresponding PART NUMBER (e.g. B1109-012-A00) and also the PARTS BOOK NUMBER (e.g. 0010-01, given at the top right of the cover) or the MACHINE SERIAL NUMBER, because there are some parts which have been changed.

From the library of: Superior Sewing Machine & Supply LLC

# パーツブックの見方

1．このパーツブックは、原則として、機構別に分類された各項目からなっております。
2．図に示された部品の品番は、図にふられている No.(Ref. No.) に対応するインデックスによって、その品番がわかります。
3．記号の説明

1）"注記" 欄の記号
① ☆印……前回のパーツブックに比較して今回変更された部品を意味します。
② ◇01……ページ下の "注記" の説明を参照して下さい。

2）"変更年月" 欄の記号
① A．10/74……1974年10月より追加された。
② D．1/75 ……1975年1月より削除された。
③ D．（削除）、A．（追加）が連記してある場合。
D．12/74
A．12/74
ⓐ 部品の互換性がない変更の場合
この場合は削除（D）された品番でも御注文できますから、変更年月により、いずれかの部品を選択して御注文下さい。

〔例〕

| Ref. No. | Note 注記 | Part No. 品番 | Description | E.C. 変更年月 | 品名 | Amt. Req. 数量 |
|---|---|---|---|---|---|---|
| 1 | ☆ | B1401-100-000 | Needle bar | D.12/74 | ハリボー | — |
| 1-1 | ☆ | B1401-100-000-A | Needle bar | A.12/74 | ハリボー | 1 |

ⓑ 部品の互換性がある場合の変更
この場合は、旧部品の和文品名欄にそれにかわる新しい品番が記入してありますので、新しい品番で御注文下さい。

〔例〕

| Ref. No. | Note 注記 | Part No. 品番 | Description | E.C. 変更年月 | 品名 | Amt. Req. 数量 |
|---|---|---|---|---|---|---|
| 1 | ☆ | B1105-200-000 | Frame cover | D.12/74 | B1105-300-000 | — |
| | ☆ | B1105-300-000 | Frame cover | A.12/74 | フレームカバー | 1 |

④ C．3/75 ……1975年3月に品番のミスが判明した為、正しい品番に訂正された。
この場合は品番欄に正しい品番を、和文品名欄に間違いの品番が記入してありますので、正しい品番で御注文下さい。

〔例〕

| Ref. No. | Note 注記 | Part No. 品番 | Description | E.C. 変更年月 | 品名 | Amt. Req. 数量 |
|---|---|---|---|---|---|---|
| 1 | ☆ | B1105-500-000 ↑ 正しい品番 | Frame cover | C.3/75 | ~~B1105-600-000~~ ↑ 間違っていた品番 | 1 |

⑤ M．5/75 ……1975年5月より数量が変更になった。
この場合数量欄には新しい数量が表示してあります。

3）"数量" 欄の記号
① 2 ……数量、2個を表わします。
② 2.0 ……長さ、2メートルを表わします。（単位はメートルです）
③ — ……このパーツブックから削除された部品です。
④ （1）……組部品を構成している子部品を表わします。
組部品は品名欄に英文で "asm." 和文で クミ と表示してあります。

〔例〕

| Ref. No. | Note 注記 | Part No. 品番 | Description | E.C. 変更年月 | 品名 | Amt. Req. 数量 |
|---|---|---|---|---|---|---|
| 10 | | B1105-900-0A0 | Frame cover asm. | | フレームカバー クミ | 1 |
| 11 | | B1105-900-000 | Frame cover | | フレームカバー | (1) |
| 12 | | SS-8110310-SF | Screw 11/64-40 L=2.8 | | トメネジ 11/64-40 L=2.8 | (2) |

## 補用部品注文の際の御注意

このパーツブックに記載されている補用部品を御注文の際は、部品の番号(例えば、B1109-012-A00)で御注文下さい。合わせて、御覧のパーツブックの管理番号(表紙右上、例えば、No. 0010-01)又は、機械番号を御連絡頂ければ幸いです。
改良のため部品の一部が変更になる場合がありますのでご了承下さい。

From the library of: Superior Sewing Machine & Supply LLC

# CONTENTS
# 目　次


1. MO-816-AB4 ..... 1
2. MO-816-AD4 ..... 1
3. MO-816-AF4 ..... 2
4. MO-816-BB4 ..... 2
5. MO-816-BD4 ..... 3
6. MO-816-BF4 ..... 3
7. MO-816-BH4 ..... 4
8. MO-816-CC4 ..... 4
9. MO-816-CE4 ..... 5
10. MO-816-CF4 ..... 5
11. MO-816-CH4 ..... 6
12. MO-816-DF4 ..... 6
13. MO-816-DG4 ..... 7
14. MO-816-DH4 ..... 7
15. MO-816-BD6 ..... 8
16. MO-816-CE6 ..... 8
17. MO-816-CF6 ..... 9
18. MO-816-DD6 ..... 9
19. MO-816-DE6 ..... 10
20. MO-816-DF6 ..... 10
21. MO-816-DH6 ..... 11
22. MO-816-FD6 ..... 11
23. MO-816-FF6 ..... 12
24. MO-816-FH6 ..... 12
25. MO-815 ..... 13
26. MO-840 ..... 13
27. NUMERICAL INDEX 索　引 ..... 14


Other parts books related to this model :

この機種に関連するパーツブックとして下記のパーツブックがあります。

1. MO-800 Standard model (No. 0008) (No. 0063)
   MO-800 標準機種
2. MO-800 Subclass　Single-needle overlock machine (No. 0004)
   MO-800 サブクラス　一本針オーバーロックミシン
3. MO-800 Subclass　Two-needle overlock machine (No. 0005)
   MO-800 サブクラス　二本針オーバーロックミシン

From the library of: Superior Sewing Machine & Supply LLC

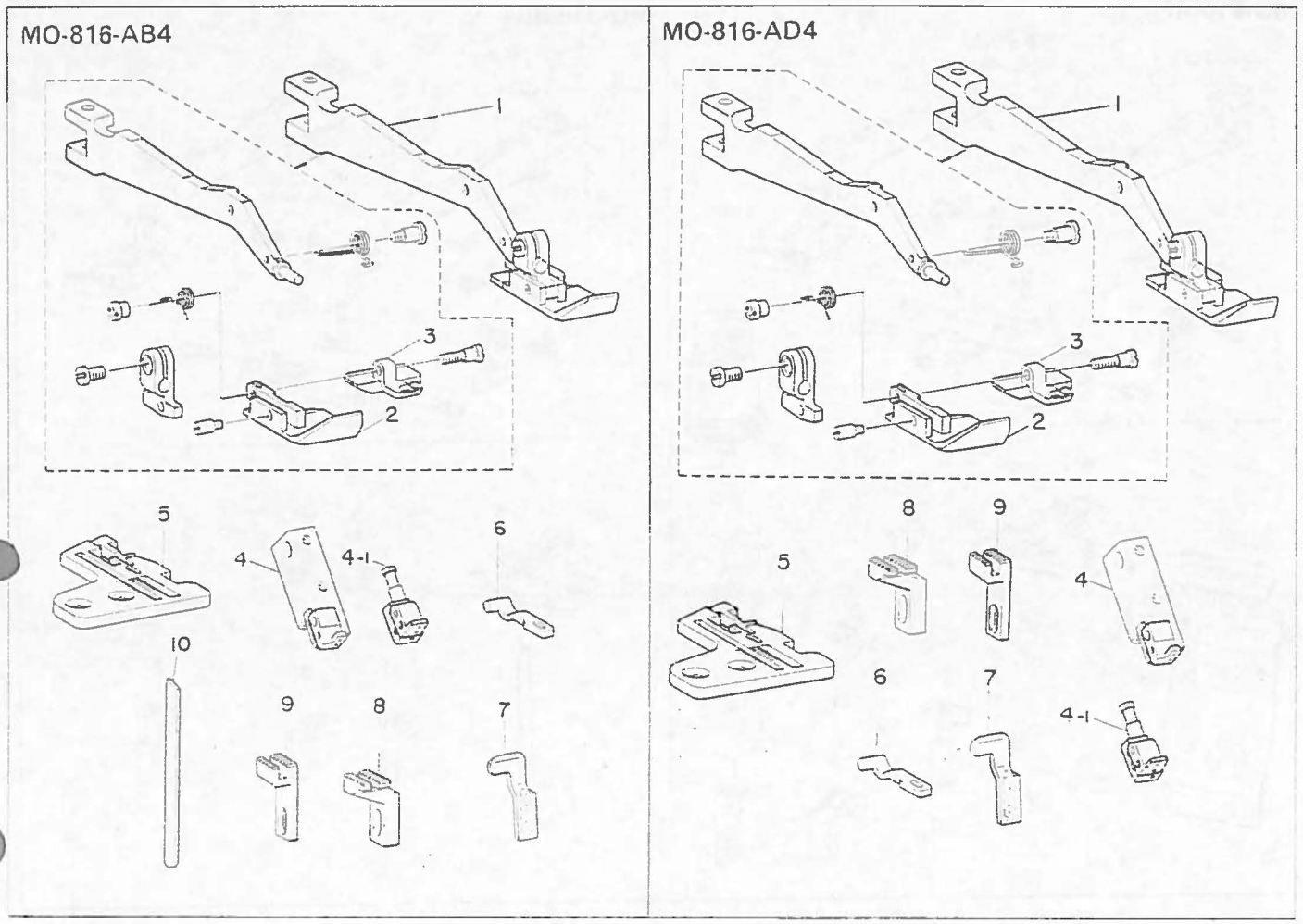


## 1. MO-816-AB4

| Ref. No. | Note 注記 | Part No. 品番 | Description | E.C. 変更年月 | 品名 | Amt. Req. 数量 |
|---|---|---|---|---|---|---|
| 1 | | B1507-816-AAB | Hinged presser foot asm. | | 自由押エ組合 | 1 |
| 2 | | B1507-816-A08 | Hinged presser foot | | 自由押エ | (1) |
| 3 | | B1508-816-A0E | Presser foot, rear | | 後押エ | (1) |
| 4 | | B1419-816-AAD | Needle clamp (with needle stopper) | D.6/74 | 針留 | – |
| 4-1 | | B1420-716-A00 | Chain stitch needle clamp | A.6/74 | 二重環針留 | 1 |
| 5 | | R4504-E0B-C00 | Throat plate | | 針板 | 1 |
| 6 | | B4120-816-D08-A | Needle guard (E) | | 針受(E) | 1 |
| 7 | | B4121-816-D08 | Needle guard (D) | | 針受(D) | 1 |
| 8 | | B1656-816-B0F | Main feed dog | | 主送り歯 | 1 |
| 9 | | B1658-816-008 | Auxiliary feed dog | | 補助送り歯 | 1 |
| 10 | | B4118-804-000 | Lower knife | A.11/74 | 下メス | 1 |

## 2. MO-816-AD4

| | | | | | | |
|---|---|---|---|---|---|---|
| 1 | | B1507-816-AAA | Hinged presser foot asm. | | 自由押エ組合 | 1 |
| 2 | | B1507-816-A0A | Hinged presser foot | | 自由押エ | (1) |
| 3 | | B1508-816-A0E | Presser foot, rear | | 後押エ | (1) |
| 4 | | B1419-816-AAD | Needle clamp (with needle stopper) | D.6/74 | 針留 | – |
| 4-1 | | B1420-716-A00 | Chain stitch needle clamp | A.6/74 | 二重環針留 | 1 |
| 5 | | R4504-E0D-C00 | Throat plate | | 針板 | 1 |
| 6 | | B4120-816-D08-A | Needle guard (E) | | 針受(E) | 1 |
| 7 | | B4121-816-D08 | Needle guard (D) | | 針受(D) | 1 |
| 8 | | B1656-816-B0F | Main feed dog | | 主送り歯 | 1 |
| 9 | | B1658-816-008 | Auxiliary feed dog | | 補助送り歯 | 1 |

* All parts not mentioned above are same as those of Model MO-816-DD4. 上記以外の部品はMO-816-DD4と共通です。

From the library of: Superior Sewing Machine & Supply LLC

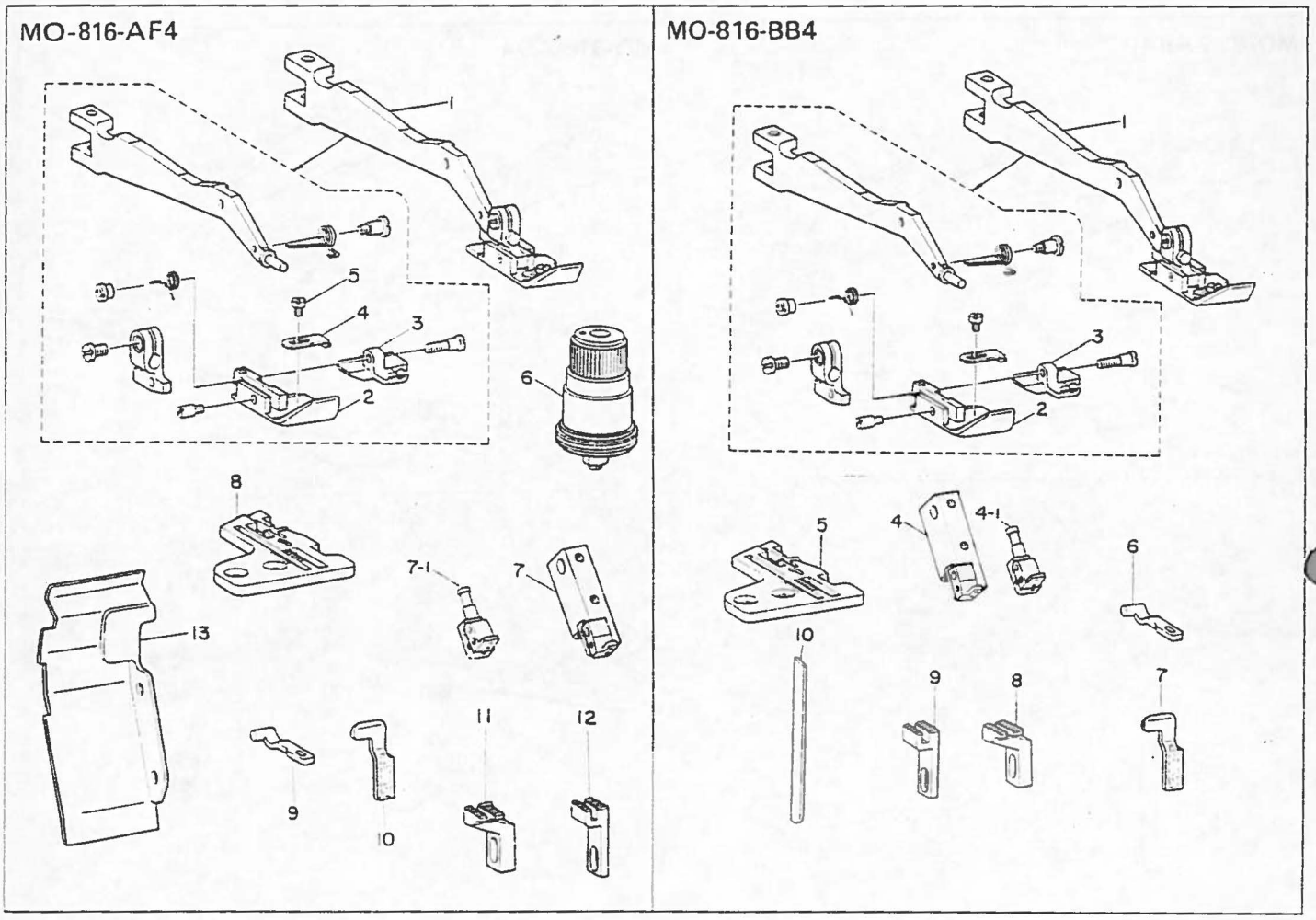


## 3. MO-816-AF4

| Ref. No. | Note 注記 | Part No. 品番 | Description | E.C. 変更年月 | 品名 | Amt. Req. 数量 |
|---|---|---|---|---|---|---|
| 1 | | B1507-816-AAE | Hinged presser foot asm. | | 自由押エ結合 | 1 |
| 2 | | B1507-816-A0E | Hinged presser foot | | 自由押エ | (1) |
| 3 | | B1508-816-A0E | Presser foot, rear | | 後押エ | (1) |
| 4 | | B1530-816-D00 | Auxiliary stopper | | 補助止メ板 | (1) |
| 5 | | SS-6060340-SP | . . . Screw | | 補助止メ板止ネジ | (1) |
| 6 | | B3101-704-0B0 | Thread tension spring asm. | | 糸調子バネ結合(赤) | 1 |
| 7 | | B1419-816-AAD | Needle clamp (with needle stopper) | D.6/74 | 針留 | – |
| 7-1 | | B1420-716-A00 | Chain stitch needle clamp | A.6/74 | 二重環針留 | 1 |
| 8 | | R4504-E0F-C00 | Throat plate | | 針板 | 1 |
| 9 | | B4120-816-D0B-A | Needle guard (E) | | 針受(E) | 1 |
| 10 | | B4121-816-D0B | Needle guard (D) | | 針受(D) | 1 |
| 11 | | B1656-816-B0F | Main feed dog | | 主送り歯 | 1 |
| 12 | | B1658-816-00B | Auxiliary feed dog | | 補助送り歯 | 1 |
| 13 | | B1121-716-F0C | Chip guard cover | | 布クズカバー | 1 |

## 4. MO-816-BB4

| | | | | | | |
|---|---|---|---|---|---|---|
| 1 | | B1507-816-BAA | Hinged presser foot asm. | | 自由押エ結合 | 1 |
| 2 | | B1507-816-B0A | Hinged presser foot | | 自由押エ | (1) |
| 3 | | B1508-816-B0C | Presser foot, rear | | 後押エ | (1) |
| 4 | | B1419-816-BAB | Needle clamp (with needle stopper) | D.6/74 | 針留 | – |
| 4-1 | | B1420-716-B00 | Chain stitch needle clamp | A.6/74 | 二重環針留 | 1 |
| 5 | | R4505-E0B-C00 | Throat plate | | 針板 | 1 |
| 6 | | B4120-816-D0B-A | Needle guard (E) | | 針受(E) | 1 |
| 7 | | B4121-816-D0B | Needle guard (D) | | 針受(D) | 1 |
| 8 | | B1656-816-B0F | Main feed dog | | 主送り歯 | 1 |
| 9 | | B1658-816-00B | Auxiliary feed dog | | 補助送り歯 | 1 |
| 10 | | B4118-804-000 | Lower knife | A.11/74 | 下メス | 1 |

* All parts not mentioned above are same as those of Model MO-816-DD4. 上記以外の部品はMO-816-DD4と共通です。

From the library of: Superior Sewing Machine & Supply LLC

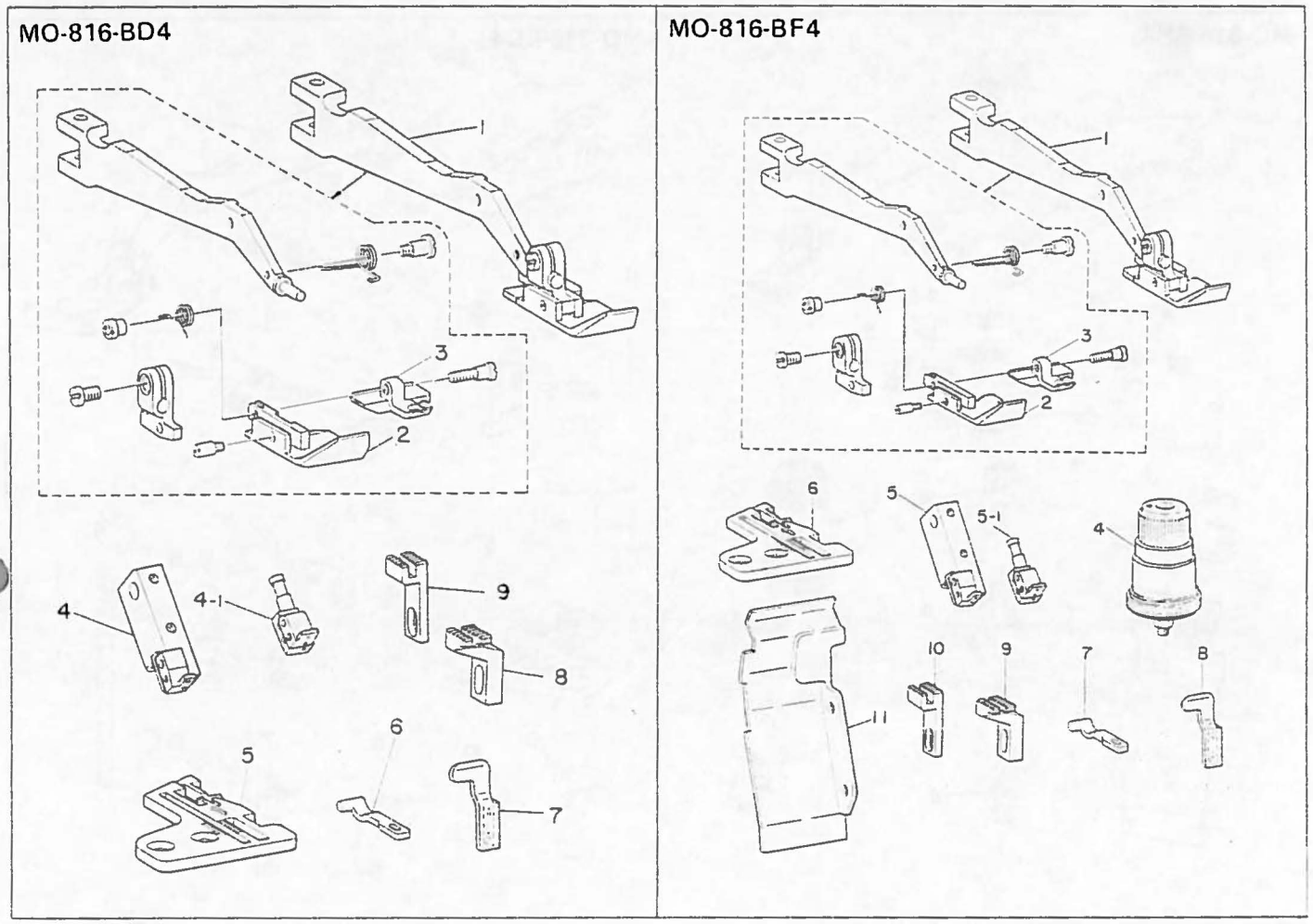


## 5. MO-816-BD4

| Ref. No. | Note 注記 | Part No. 品番 | Description | E.C. 変更年月 | 品名 | Amt. Req. 数量 |
|---|---|---|---|---|---|---|
| 1 | | B1507-816-BAC | Hinged presser foot asm. | | 自由押エ結合 | 1 |
| 2 | | B1507-816-B0C | Hinged presser foot | | 自由押エ | (1) |
| 3 | | B1508-816-B0C | Presser foot, rear | | 後押エ | (1) |
| 4 | | B1419-816-BAB | Needle clamp (with needle stopper) | D.6/74 | 針留 | — |
| 4-1 | | B1420-716-B00 | Chain stitch needle clamp | A.6/74 | 二重環針留 | 1 |
| 5 | | R4505-E0D-C00 | Throat plate | | 針板 | 1 |
| 6 | | B4120-816-D0B-A | Needle guard (E) | | 針受(E) | 1 |
| 7 | | B4121-816-D0B | Needle guard (D) | | 針受(D) | 1 |
| 8 | | B1656-816-B0F | Main feed dog | | 主送り歯 | 1 |
| 9 | | B1658-816-00B | Auxiliary feed dog | | 補助送り歯 | 1 |

## 6. MO-816-BF4

| | | | | | | |
|---|---|---|---|---|---|---|
| 1 | | B1507-816-BAD | Hinged presser foot asm. | | 自由押エ結合 | 1 |
| 2 | | B1507-816-B0D | Hinged presser foot | | 自由押エ | (1) |
| 3 | | B1508-816-B0F | Presser foot, rear | | 後押エ | (1) |
| 4 | | B3101-704-0B0 | Thread tension spring asm. | | 糸調子バネ結合(赤) | 1 |
| 5 | | B1419-816-BAB | Needle clamp (with needle stopper) | D.6/74 | 針留 | — |
| 5-1 | | B1420-716-B00 | Chain stitch needle clamp | A.6/74 | 二重環針留 | 1 |
| 6 | | R4505-E0F-C00 | Throat plate | | 針板 | 1 |
| 7 | | B4120-816-D0B-A | Needle guard (E) | | 針受(E) | 1 |
| 8 | | B4121-816-D0B | Needle guard (D) | | 針受(D) | 1 |
| 9 | | B1656-816-B0F | Main feed dog | | 主送り歯 | 1 |
| 10 | | B1658-816-00B | Auxiliary feed dog | | 補助送り歯 | 1 |
| 11 | | B1121-716-F0C | Chip guard cover | | 布クズカバー | 1 |

* All parts not mentioned above are same as those of Model MO-816-DD4. 上記以外の部品はMO-816-DD4と共通です。

From the library of: Superior Sewing Machine & Supply LLC

MO-816-BH4

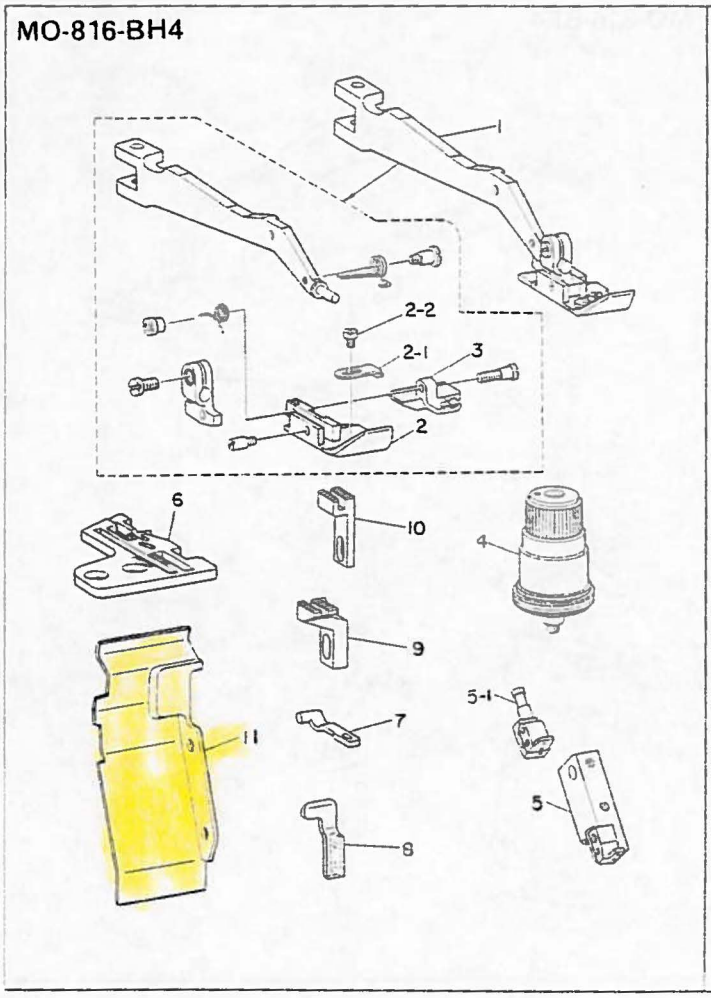


MO-816-CC4

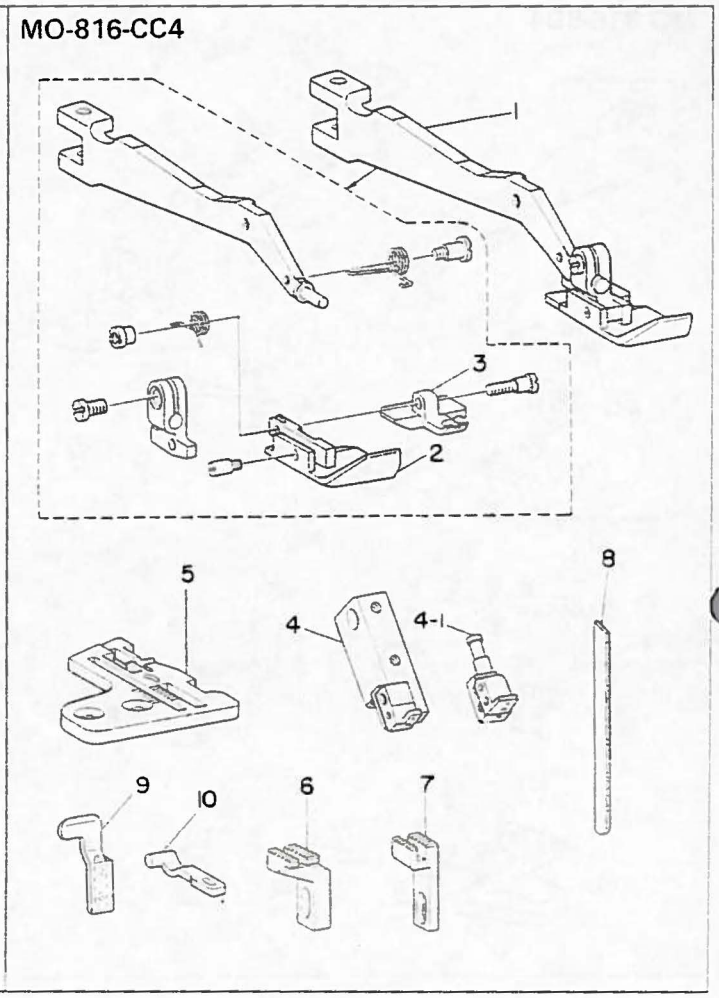


## 7. MO-816-BH4

| Ref. No. | Note 注記 | Part No. 品番 | Description | E.C. 変更年月 | 品名 | Amt. Req. 数量 |
|---|---|---|---|---|---|---|
| 1 | | B1507-816-BAD | Hinged presser foot asm. | | 自由押エ結合 | 1 |
| 2 | | B1507-816-B0D | Hinged presser foot | | 自由押エ | (1) |
| 2-1 | | B1530-816-D00 | Auxiliary stopper | | 補助止メ板 | (1) |
| 2-2 | | SS-6060340-SP | Screw | | 補助止メ板止ネジ | (1) |
| 3 | | B1508-816-B0F | Presser foot, rear | | 後押エ | (1) |
| 4 | | B3101-704-0B0 | Thread tension spring asm. | | 糸調子バネ結合(示) | 1 |
| 5 | | B1419-816-BAB | Needle clamp (with needle stopper) | D.6/74 | 針留 | — |
| 5-1 | | B1420-716-B00 | Chain stitch needle clamp | A.6/74 | 二重環針留 | 1 |
| 6 | | R4505-E0H-C00 | Throat plate | | 針板 | 1 |
| 7 | | B4120-816-D0B-A | Needle guard (E) | | 針受(E) | 1 |
| 8 | | B4121-816-D0B | Needle guard (D) | | 針受(D) | 1 |
| 9 | | B1656-816-B0F | Main feed dog | | 主送り歯 | 1 |
| 10 | | B1658-816-00B | Auxiliary feed dog | | 補助送り歯 | 1 |
| 11 | | B1121-716-D0B | Chip guard cover | | 布クズカバー | 1 |

## 8. MO-816-CC4

| | | | | | | |
|---|---|---|---|---|---|---|
| 1 | | B1507-816-CAA | Hinged presser foot asm. | | 自由押エ結合 | 1 |
| 2 | | B1507-816-C0A | Hinged presser foot | | 自由押エ | (1) |
| 3 | | B1508-816-C0A | Presser foot, rear | | 後押エ | (1) |
| 4 | | B1419-816-CAE | Needle clamp (with needle stopper) | D.6/74 | 針留 | — |
| 4-1 | | B1420-716-C00 | Chain stitch needle clamp | A.6/74 | 二重環針留 | 1 |
| 5 | | R4506-E0C-C00 | Throat plate | | 針板 | 1 |
| 6 | | B1656-816-B0F | Main feed dog | | 主送り歯 | 1 |
| 7 | | B1658-816-00B | Auxiliary feed dog | | 補助送り歯 | 1 |
| 8 | | B4118-804-000 | Lower knife | A.11/74 | 下メス | 1 |
| 9 | | B4121-816-D0B | Needle guard (D) | A.2/75 | 針受 (D) | 1 |
| 10 | | B4120-816-D0B-A | Needle guard (E) | A.2/75 | 針受 (E) | 1 |

* All parts not mentioned above are same as those of Model MO-816-DD4. 上記以外の部品はMO-816-DD4と共通です。

From the library of: Superior Sewing Machine & Supply LLC

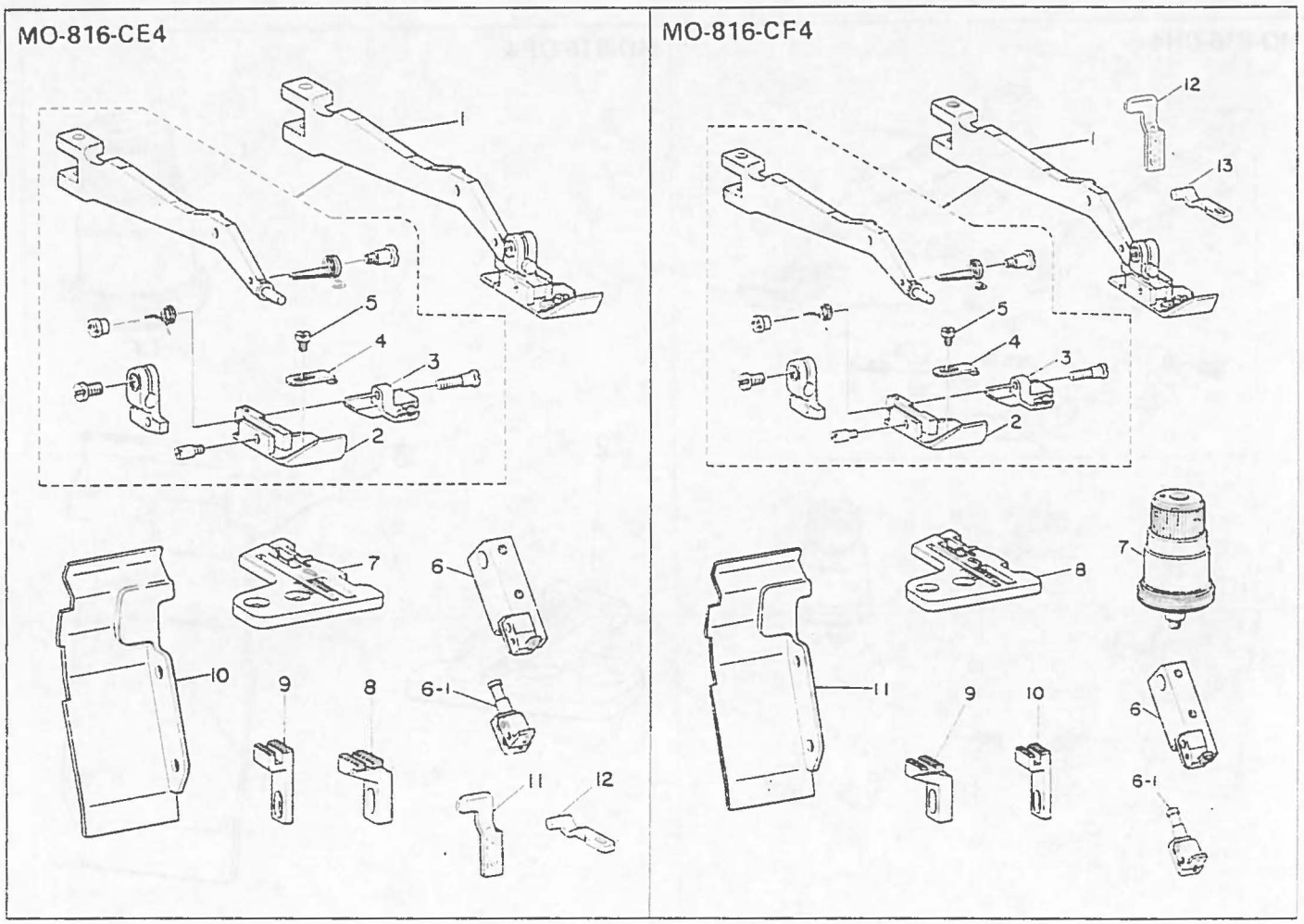


## 9. MO-816-CE4

| Ref. No. | Note 注記 | Part No. 品番 | Description | E.C. 変更年月 | 品名 | Amt. Req. 数量 |
|---|---|---|---|---|---|---|
| 1 | | B1507-816-CAJ | Hinged presser foot asm. | | 自由押エ結合 | 1 |
| 2 | | B1507-816-C0J | Hinged presser foot | | 自由押エ | (1) |
| 3 | | B1508-816-C0F | Presser foot, rear | | 後押エ | (1) |
| 4 | | B1530-816-D00 | Auxiliary stopper | | 補助止メ板 | (1) |
| 5 | | SS-6060340-SP | . . . Screw | | 補助止メ板止ネジ | (1) |
| 6 | | B1419-816-CAE | Needle clamp (with needle stopper) | D.6/74 | 針留 | – |
| 6-1 | | B1420-716-C00 | Chain stitch needle clamp | A.6/74 | 二重環針留 | 1 |
| 7 | | R4506-E0E-C00 | Throat plate | | 針板 | 1 |
| 8 | | B1656-816-B0F | Main feed dog | | 主送り歯 | 1 |
| 9 | | B1658-816-00B | Auxiliary feed dog | | 補助送り歯 | 1 |
| 10 | | B1121-716-F0C | Chip guard cover | | 布クズカバー | 1 |
| 11 | | B4121-816-D0B | Needle guard (D) | A.2/75 | 針受（D） | 1 |
| 12 | | B4120-816-D0B-A | Needle guard (E) | A.2/75 | 針受（E） | 1 |

## 10. MO-816-CF4

| | | | | | | |
|---|---|---|---|---|---|---|
| 1 | | B1507-816-CAJ | Hinged presser foot asm. | | 自由押エ結合 | 1 |
| 2 | | B1507-816-C0J | Hinged presser foot | | 自由押エ | (1) |
| 3 | | B1508-816-C0F | Presser foot, rear | | 後押エ | (1) |
| 4 | | B1530-816-D00 | Auxiliary stopper | | 補助止メ板 | (1) |
| 5 | | SS-6060340-SP | . . . Screw | | 補助止メ板止ネジ | (1) |
| 6 | | B1419-816-CAE | Needle clamp (with needle stopper) | D.6/74 | 針留 | – |
| 6-1 | | B1420-716-C00 | Chain stitch needle clamp | A.6/74 | 二重環針留 | 1 |
| 7 | | B3101-704-0B0 | Thread tension spring asm. | | 糸調子バネ結合(赤) | 1 |
| 8 | | R4506-E0F-C00 | Throat plate | | 針板 | 1 |
| 9 | | B1656-816-B0F | Main feed dog | | 主送り歯 | 1 |
| 10 | | B1658-816-00B | Auxiliary feed dog | | 補助送り歯 | 1 |
| 11 | | B1121-716-F0C | Chip guard cover | | 布クズカバー | 1 |
| 12 | | B4121-816-D0B | Needle guard (D) | A.2/75 | 針受（D） | 1 |
| 13 | | B4120-816-D0B-A | Needle guard (E) | A.2/75 | 針受（E） | 1 |

* All parts not mentioned above are same as those of Model MO-816-DD4. 上記以外の部品はMO-816-DD4と共通です。

From the library of: Superior Sewing Machine & Supply LLC

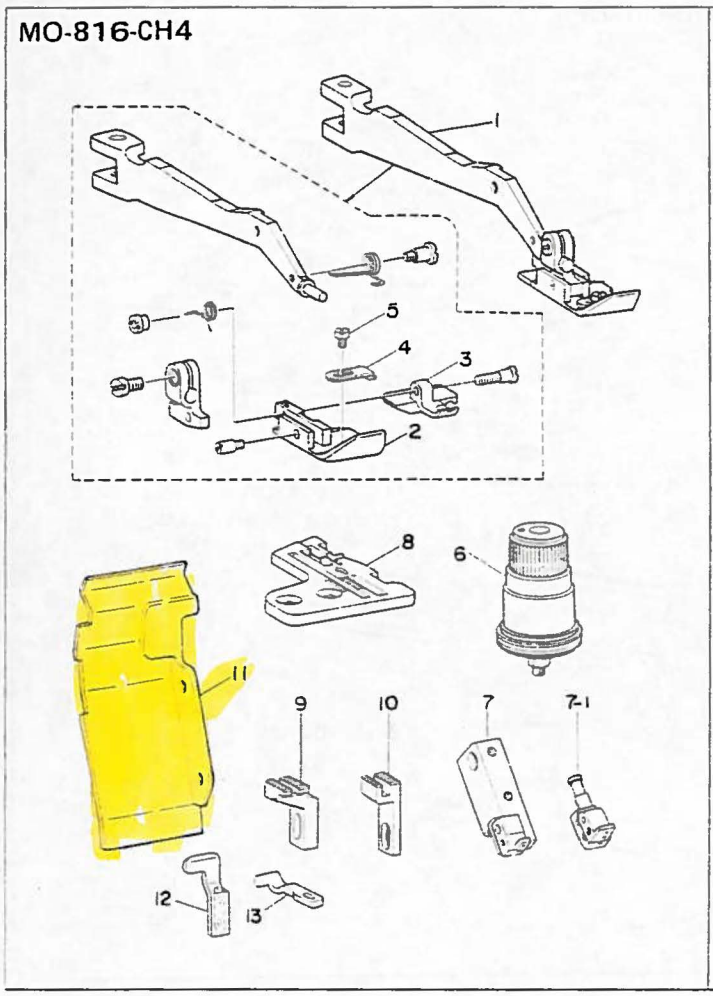


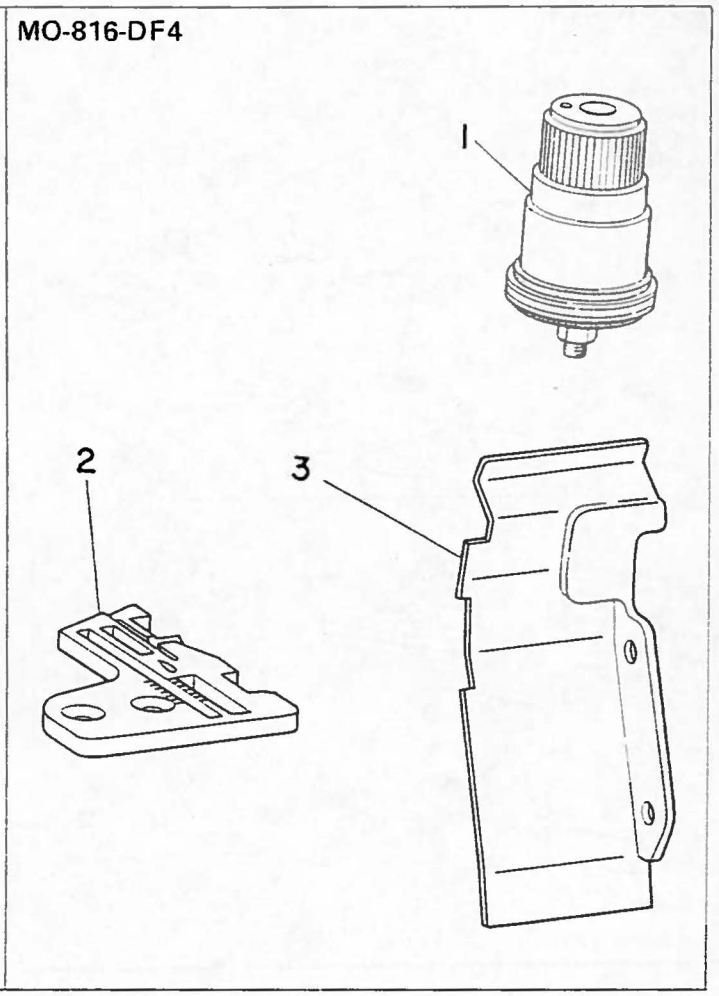


## 11. MO-816-CH4

| Ref. No. | Note 注記 | Part No. 品番 | Description | E.C. 変更年月 | 品名 | Amt. Req. 数量 |
|---|---|---|---|---|---|---|
| 1 | | B1507-816-CAJ | Hinged presser foot asm. | | 自由押エ結合 | 1 |
| 2 | | B1507-816-C0J | Hinged presser foot | | 自由押エ | (1) |
| 3 | | B1508-816-C0F | Presser foot, rear | | 後押エ | (1) |
| 4 | | B1530-816-D00 | Auxiliary stopper | | 補助止メ板 | (1) |
| 5 | | SS-6060340-SP | . . . Screw | | 補助止メ板止ネジ | (1) |
| 6 | | B3101-704-000 | Thread tension spring asm. | | 糸調子バネ結合(赤) | 1 |
| 7 | | B1419-816-CAE | Needle clamp (with needle stopper) | D.6/74 | 針留 | — |
| 7-1 | | B1420-716-C00 | Chain stitch needle clamp | A.6/74 | 二重環針留 | 1 |
| 8 | | R4506-E0H-C00 | Throat plate | | 針板 | 1 |
| 9 | | B1656-816-B0F | Main feed dog | | 主送り歯 | 1 |
| 10 | | B1658-816-00B | Auxiliary feed dog | | 補助送り歯 | 1 |
| 11 | | B1121-716-D0B | Chip guard cover | | 布クスカバー | 1 |
| 12 | | B4121-816-D0B | Needle guard (D) | A.2/75 | 針受 (D) | 1 |
| 13 | | B4120-816-D0B-A | Needle guard (E) | A.2/75 | 針受 (E) | 1 |

## 12. MO-816-DF4

| | | | | | | |
|---|---|---|---|---|---|---|
| 1 | | B3101-704-080 | Thread tension spring asm. | | 糸調子バネ結合(赤) | 1 |
| 2 | | R4508-E0F-C00 | Throat plate | | 針板 | 1 |
| 3 | | B1121-716-F0C | Chip guard cover | | 布クスカバー | 1 |

* All parts not mentioned above are same as those of Model MO-816-DD4. 上記以外の部品はMO-816-DD4と共通です。

From the library of: Superior Sewing Machine & Supply LLC

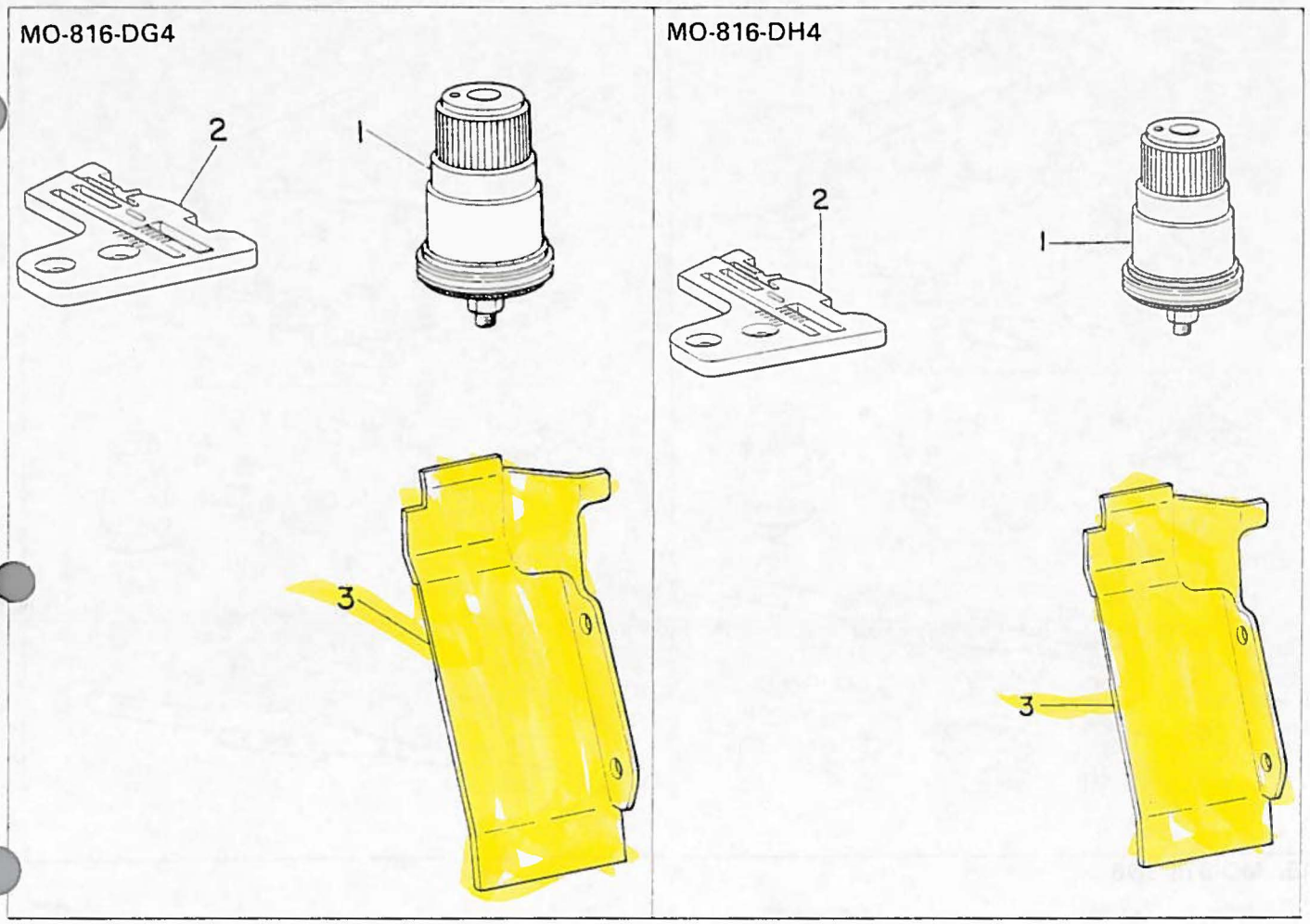


## 13. MO-816-DG4

| Ref. No. | Note 注記 | Part No. 品番 | Description | E.C. 変更年月 | 品名 | Amt. Req. 数量 |
|---|---|---|---|---|---|---|
| 1 | | B3101-704-080 | Thread tension spring asm. | | 糸調子バネ結合(赤) | 1 |
| 2 | | R4508-E0G-C00 | Throat plate | | 針板 | 1 |
| 3 | | B1121-716-D0B | Chip guard cover | | 布クズカバー | 1 |

## 14. MO-816-DH4

| | | | | | | |
|---|---|---|---|---|---|---|
| 1 | | B3101-704-080 | Thread tension spring asm. | A.8/74 | 糸調子バネ結合(赤) | 1 |
| 2 | | R4508-E0H-C00 | Throat plate | | 針板 | 1 |
| 3 | | B1121-716-D0B | Chip guard cover | | 布クズカバー | 1 |

* All parts not mentioned above are same as those of Model MO-816-DD4. 上記以外の部品はMO-816-DD4と共通です。

From the library of: Superior Sewing Machine & Supply LLC

MO-816-BD6

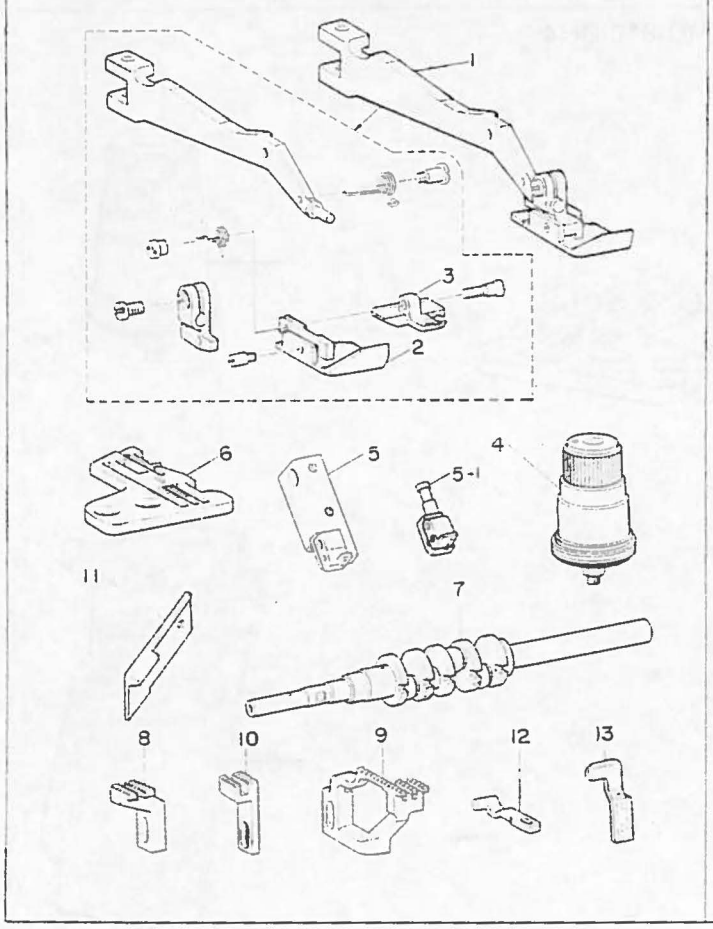


MO-816-CE6

## 15. MO-816-BD6

| Ref. No. | Note 注記 | Part No. 品番 | Description | E.C. 変更年月 | 品名 | Amt. Req. 数量 |
|---|---|---|---|---|---|---|
| 1 | | B1507-816-BAC | Hinged presser foot asm. | | 自由押エ結合 | 1 |
| 2 | | B1507-816-B0C | Hinged presser foot | | 自由押エ | (1) |
| 3 | | B1508-816-B0C | Presser foot, rear | | 後押エ | (1) |
| 4 | | B3101-704-0B0 | Thread tension spring asm. (red) | | 糸調子バネ結合(赤) | 1 |
| 5 | | B1419-816-BAB | Needle clamp (with needle stopper) | D.6/74 | 針留 | — |
| 5-1 | | B1420-716-B00 | Chain stitch needle clamp | A.6/74 | 二重環針留 | 1 |
| 6 | | R4605-E0D-F00 | Throat plate | | 針板 | 1 |
| 7 | | B1201-816-00B-A | Crankshaft (A) | | 主軸(B) | 1 |
| 8 | | B1656-816-B0F | Main feed dog | | 主送り歯 | 1 |
| 9 | | B1657-816-D0G | Differential feed dog | | 副送り歯 | 1 |
| 10 | | B1658-816-00B | Auxiliary feed dog | | 補助送り歯 | 1 |
| 11 | | B4111-804-00A | Upper knife (A) | | 上メス(A) | 1 |
| 12 | | B4120-816-D0B-A | Needle guard (E) | | 針受(E) | 1 |
| 13 | | B4121-816-D0B | Needle guard (D) | | 針受(D) | 1 |

## 16. MO-816-CE6

| | | | | | | |
|---|---|---|---|---|---|---|
| 1 | | B1507-816-CAJ | Hinged presser foot asm. | | 自由押エ結合 | 1 |
| 2 | | B1507-816-C0J | Hinged presser foot | | 自由押エ | (1) |
| 3 | ☆ | B1508-816-C0F | Presser foot, rear | D.6/78 | B1508-816-C0A | — |
| | ☆ | B1508-816-C0A | Presser foot, rear | A.6/78 | 後押エ | (1) |
| 4 | ☆ | B1530-816-D00 | Auxiliary stopper | D.6/78 | 補助止メ板 | — |
| 5 | ☆ | SS-6060340-SP | . . . Screw | D.6/78 | 補助止メ板止ネジ | — |
| 6 | | B3101-704-0B0 | Thread tension spring asm. (red) | | 糸調子バネ結合(赤) | 1 |
| 7 | | B1419-816-CAE | Needle clamp (with needle stopper) | D.6/74 | 針留 | — |
| 7-1 | | B1420-716-C00 | Chain stitch needle clamp | A.6/74 | 二重環針留 | 1 |
| 8 | | R4606-E0E-F00 | Throat plate | | 針板 | 1 |
| 9 | | B1201-816-00B-A | Crankshaft (B) | | 主軸(B) | 1 |
| 10 | | B1656-816-B0F | Main feed dog | | 主送り歯 | 1 |
| 11 | | B1657-816-D0G | Differential feed dog | | 副送り歯 | 1 |
| 12 | | B1658-816-00B | Auxiliary feed dog | | 補助送り歯 | 1 |
| 13 | | B4111-804-00A | Upper knife (A) | | 上メス(A) | 1 |
| 14 | | B1121-716-F0C | Chip guard cover | | 布クズカバー | 1 |
| 15 | | B4121-816-D0B | Needle guard (D) | A.2/75 | 針受 (D) | 1 |
| 16 | | B4120-816-D0B-A | Needle guard (E) | A.2/75 | 針受 (E) | 1 |

* All parts not mentioned above are same as those of Model MO-816-DD4. 上記以外の部品はMO-816-DD4と共通です

From the library of: Superior Sewing Machine & Supply LLC

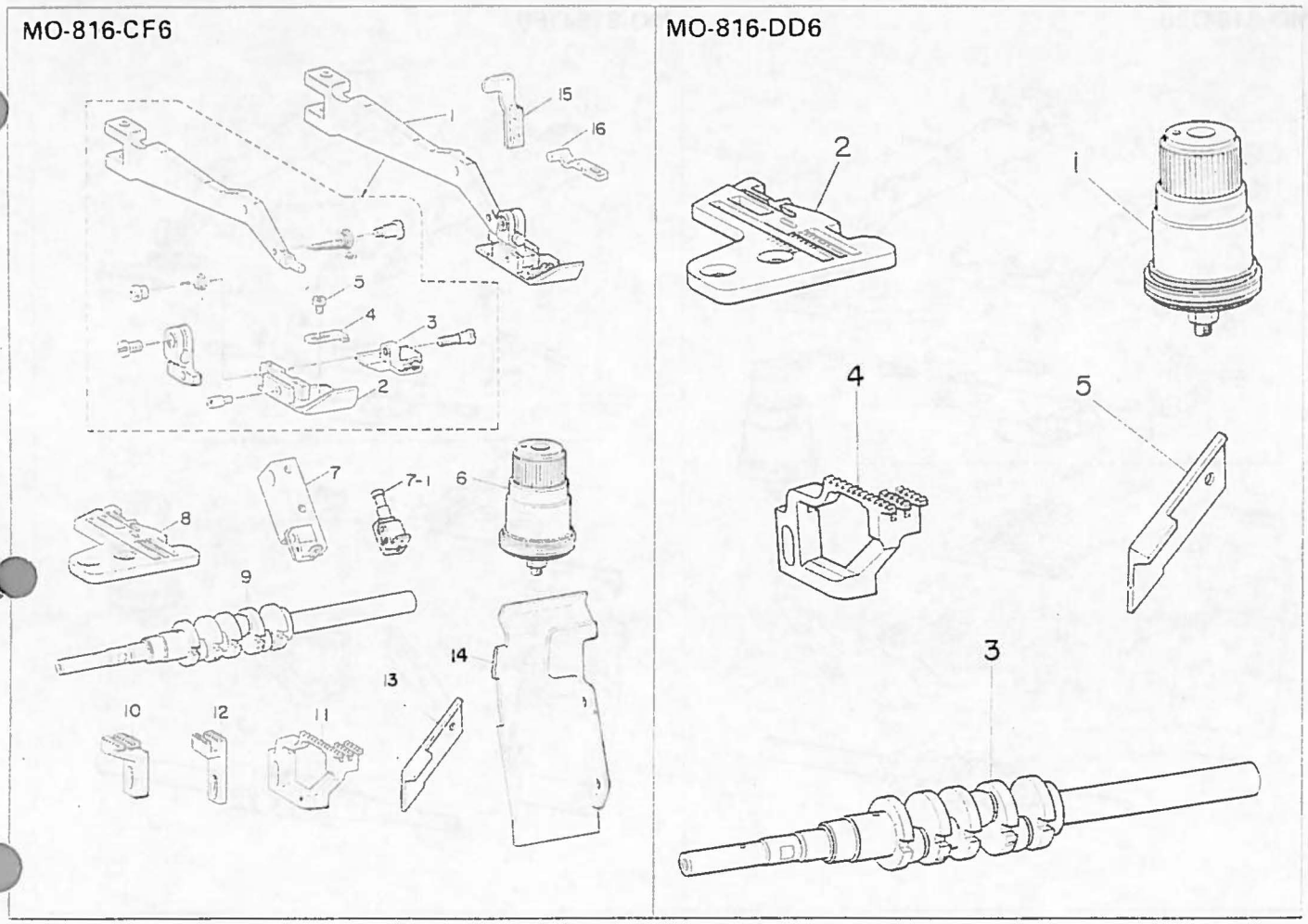


## 17. MO-816-CF6

| Ref. No. | Note 注記 | Part No. 品番 | Description | E.C. 変更年月 | 品名 | Amt. Req. 数量 |
|---|---|---|---|---|---|---|
| 1 | | B1507-816-CAJ | Hinged presser foot asm. | | 自由押エ結合 | 1 |
| 2 | | B1507-816-C0J | Hinged presser foot | | 自由押エ | (1) |
| 3 | | B1508-816-C0F | Presser foot, rear | | 後押エ | (1) |
| 4 | | B1530-816-D00 | Auxiliary stopper | | 補助止メ板 | (1) |
| 5 | | SS-6060340-SP | . . . Screw | | 補助止メ板止ネジ | (1) |
| 6 | | B3101-704-0B0 | Thread tension spring asm. (red) | | 糸調子バネ結合(赤) | 1 |
| 7 | | B1419-816-CAE | Needle clamp (with needle stopper) | D.6/74 | 針留 | — |
| 7-1 | | B1420-716-C00 | Chain needle clamp | A.6/74 | 二重環針留 | 1 |
| 8 | | R4606-E0F-F00 | Throat plate | | 針板 | 1 |
| 9 | | B1201-816-00B-A | Crankshaft | | 主軸(B) | 1 |
| 10 | | B1656-816-B0F | Main feed dog | | 主送り歯 | 1 |
| 11 | | B1657-816-D0G | Differential feed dog | | 副送り歯 | 1 |
| 12 | | B1658-816-00B | Auxiliary feed dog | | 補助送り歯 | 1 |
| 13 | | B4111-804-00A | Upper knife (A) | | 上メス(A) | 1 |
| 14 | | B1121-716-F0C | Chip guard cover | | 布クズカバー | 1 |
| 15 | | B4121-816-D0B | Needle guard (D) | A.2/75 | 針受(D) | 1 |
| 16 | | B4120-816-D0B-A | Needle guard (E) | A.2/75 | 針受(E) | 1 |

## 18. MO-816-DD6

| | | | | | | |
|---|---|---|---|---|---|---|
| 1 | | B3101-704-0B0 | Thread tension spring asm. | | 糸調子バネ結合 | 1 |
| 2 | | R4608-E0D-F00 | Throat plate | | 針板 | 1 |
| 3 | | B1201-816-00B-A | Crankshaft (B) | | 主軸(B) | 1 |
| 4 | | B1657-816-D0G | Differential feed dog | | 副送り歯 | 1 |
| 5 | | B4111-804-00A | Upper knife (A) | | 上メス(A) | 1 |

* All parts not mentioned above are same as those of Model MO-816-DD4. 上記以外の部品はMO-816-DD4と共通です。

From the library of: Superior Sewing Machine & Supply LLC

MO-816-DE6

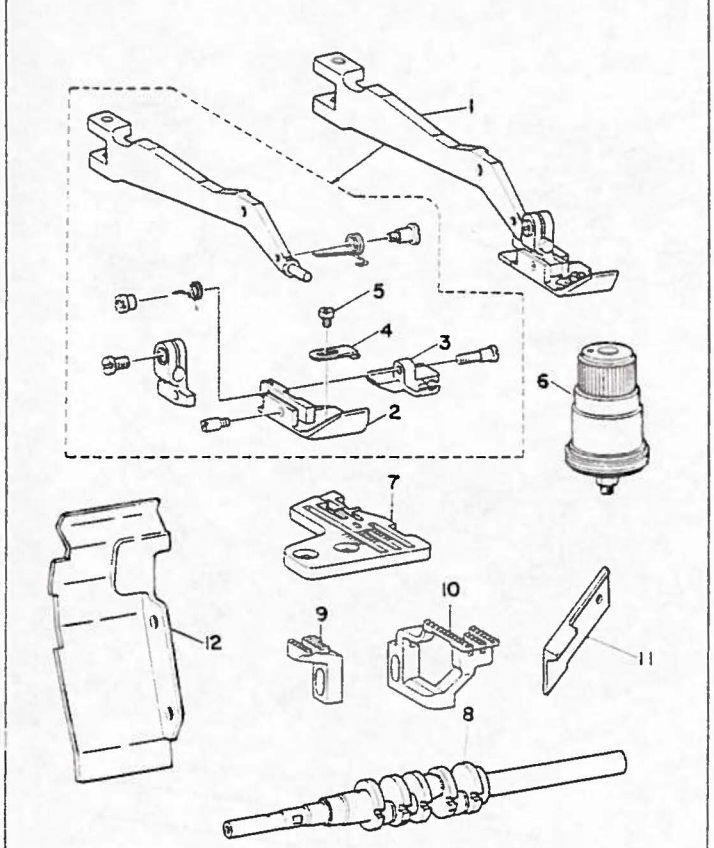


MO-816-DF6

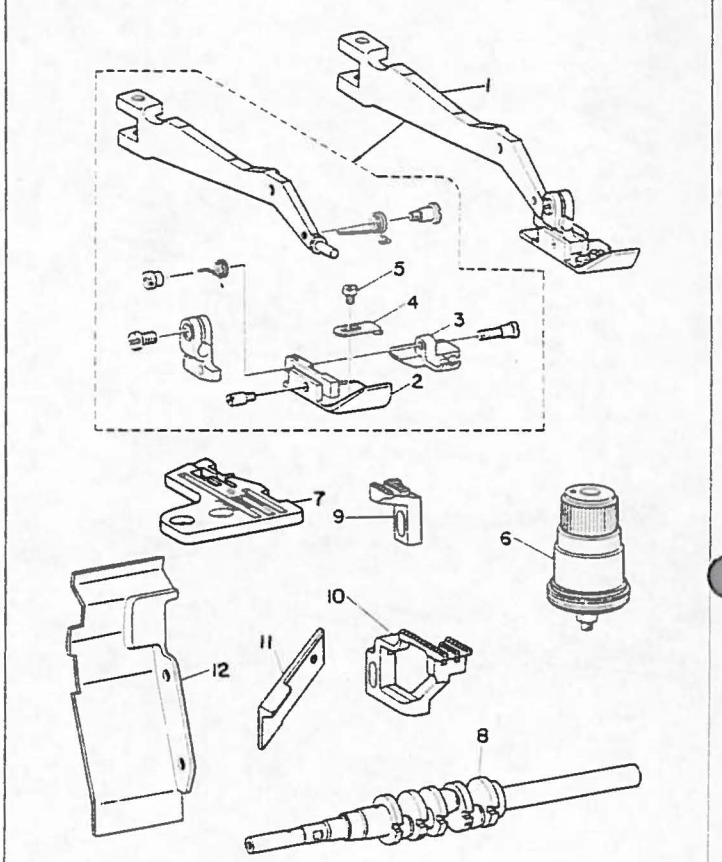


## 19. MO-816-DE6

| Ref. No. | Note 注記 | Part No. 品番 | Description | E.C. 変更年月 | 品名 | Amt. Req. 数量 |
|---|---|---|---|---|---|---|
| 1 | | B1507-816-DAB | Hinged presser foot asm. | | 自由押エ結合 | 1 |
| 2 | | B1507-816-D0B | Hinged presser foot | | 自由押エ | (1) |
| 3 | | B1508-816-D0B | Presser foot, rear | | 後押エ | (1) |
| 4 | | B1530-816-D00 | Auxiliary stopper | | 補助止メ板 | (1) |
| 5 | | SS-6060340-SP | . . . Screw | | 補助止メ板止ネジ | (1) |
| 6 | | B3101-704-0B0 | Thread tension spring asm. | | 糸調子バネ結合(赤) | 1 |
| 7 | | R4608-E0E-G00 | Throat plate | | 針板 | 1 |
| 8 | | B1201-816-00B-A | Crankshaft (B) | | 主軸(B) | 1 |
| 9 | | B1656-816-D0J | Main feed dog | | 主送り歯 | 1 |
| 10 | | B1657-816-F0K | Differential feed dog | | 副送り歯 | 1 |
| 11 | | B4111-804-00A | Upper knife (A) | | 上メス(A) | 1 |
| 12 | | B1121-716-F0C | Chip guard cover | | 布クズカバー | 1 |

## 20. MO-816-DF6

| | | | | | | |
|---|---|---|---|---|---|---|
| 1 | | B1507-816-DAB | Hinged presser foot asm. | | 自由押エ結合 | 1 |
| 2 | | B1507-816-D0B | Hinged presser foot | | 自由押エ | (1) |
| 3 | | B1508-816-D0B | Presser foot, rear | | 後押エ | (1) |
| 4 | | B1530-816-D00 | Auxiliary stopper | | 補助止メ板 | (1) |
| 5 | | SS-6060340-SP | . . . Screw | | 補助止メ板止ネジ | (1) |
| 6 | | B3101-704-0B0 | Thread tension spring asm. (red) | | 糸調子バネ結合(赤) | 1 |
| 7 | | R4608-E0F-G00 | Throat plate | | 針板 | 1 |
| 8 | | B1201-816-00B-A | Crankshaft | | 主軸(B) | 1 |
| 9 | | B1656-816-D0J | Main feed dog | | 主送り歯 | 1 |
| 10 | | B1657-816-F0K | Differential feed dog | | 副送り歯 | 1 |
| 11 | | B4111-804-00A | Upper knife (A) | | 上メス(A) | 1 |
| 12 | | B1121-716-F0C | Chip guard cover | | 布クズカバー | 1 |

* All parts not mentioned above are same as those of Model MO-816-DD4. 上記以外の部品はMO-816-DD4と共通です。

From the library of: Superior Sewing Machine & Supply LLC

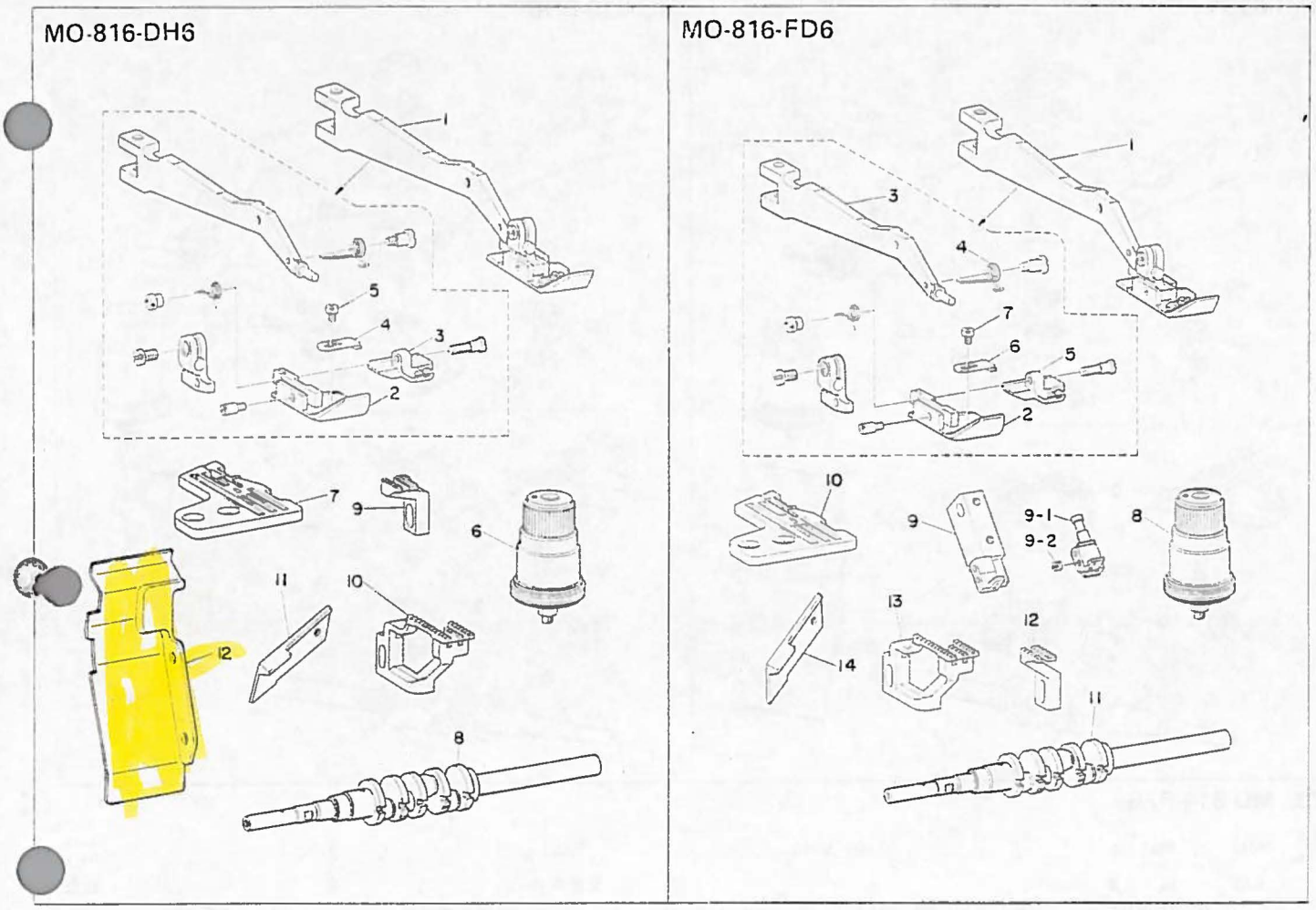


## 21. MO-816-DH6

| Ref. No. | Note 注記 | Part No. 品番 | Description | E.C. 変更年月 | 品名 | Amt. Req. 数量 |
|---|---|---|---|---|---|---|
| 1 | | B1507-816-DAB | Hinged presser foot asm. | | 自由押エ結合 | 1 |
| 2 | | B1507-816-D0B | Hinged presser foot | | 自由押エ | (1) |
| 3 | | B1508-816-D0B | Presser foot, rear | | 後押エ | (1) |
| | | B1530-816-D00 | Auxiliary stopper | | 補助止メ板 | (1) |
| | | SS-6060340-SP | . . . Screw | | 補助止メ板止ネジ | (1) |
| 6 | | B3101-704-0B0 | Thread tension spring asm. (red) | | 糸調子バネ結合(赤) | 1 |
| 7 | | R4608-E0H-G00-A | Throat plate | | 針板 | 1 |
| 8 | | B1201-816-00B-A | Crankshaft | | 主軸(B) | 1 |
| 9 | | B1656-816-D0J | Main feed dog | | 主送り歯 | 1 |
| 10 | | B1657-816-F0K | Differential feed dog | | 副送り歯 | 1 |
| 11 | | B4111-804-00A | Upper knife (A) | | 上メス(A) | 1 |
| 12 | | B1121-716-D0B | Chip guard cover | | 布クズカバー | 1 |

## 22. MO-816-FD6

| | | | | | | |
|---|---|---|---|---|---|---|
| 1 | | B1507-816-FAD | Hinged presser foot asm. | | 自由押エ結合 | 1 |
| 2 | | B1507-816-F0D | Hinged presser foot | | 自由押エ | (1) |
| 3 | | B1506-816-F0B | Hinged presser foot arm | | 自由押エ竿 | (1) |
| 4 | | B1515-816-00B | Presser foot arm spring (B) | | 押エ竿バネ(B) | (1) |
| 5 | | B1508-816-F0D | Presser foot, rear | | 後押エ | (1) |
| 6 | | B1530-816-D00 | Auxiliary stopper | | 補助止メ板 | (1) |
| 7 | | SS-6060340-SP | . . . Screw | | 補助止メ板止ネジ | (1) |
| 8 | | B3101-704-0B0 | Thread tension spring asm. (red) | | 糸調子バネ結合(赤) | 1 |
| | | B1419-816-FAC | Needle clamp (with needle stopper) | D.6/74 | 針留 | — |
| | | B1420-716-F00 | Chain stitch needle clamp | A.6/74 | 二重環針留 | 1 |
| 9-2 | | SS-8080310-TP | Needle screw | A.10/75 | 針止ネジ | 1 |
| 10 | | R4612-E0D-G00 | Throat plate | | 針板 | 1 |
| 11 | | B1201-816-00B-A | Crankshaft (B) | | 主軸(B) | 1 |
| 12 | | B1656-816-F0H | Main feed dog | | 主送り歯 | 1 |
| 13 | | B1657-816-F0K | Differential feed dog | | 副送り歯 | 1 |
| 14 | | B4111-804-00A | Upper knife (A) | | 上メス(A) | 1 |

* All parts not mentioned above are same as those of Model MO-816-DD4. 上記以外の部品はMO-816-DD4と共通です

From the library of: Superior Sewing Machine & Supply LLC

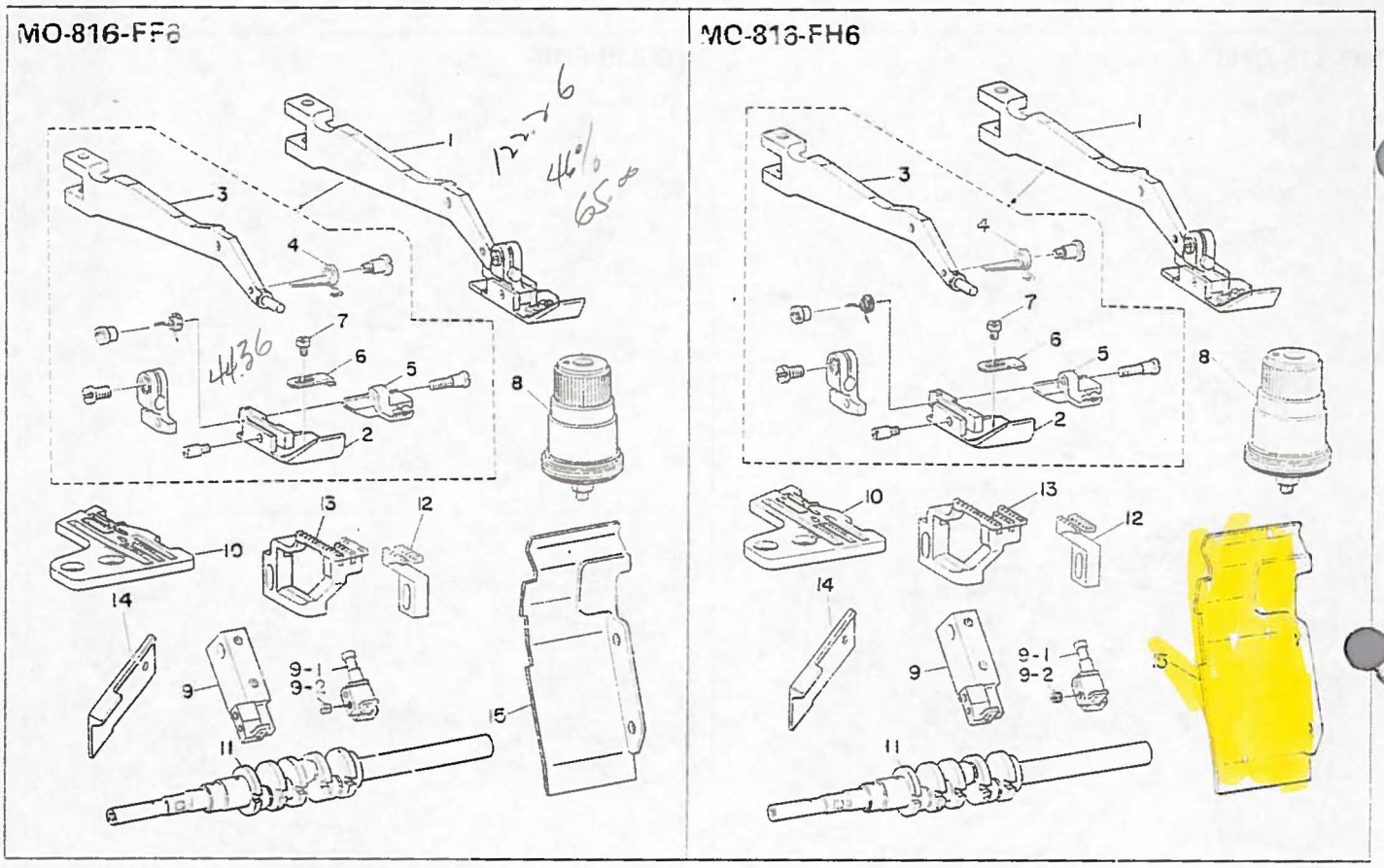


## 23. MO-816-FF6

| Ref. No. | Note 注記 | Part No. 品番 | Description | E.C. 変更年月 | 品名 | Amt. Req 数量 |
|---|---|---|---|---|---|---|
| 1 | | B1507-816-FAD | Hinged presser foot asm. | | 自由押エ結合 | 1 |
| 2 | | B1507-816-F0D | Hinged presser foot | | 自由押エ | (1) |
| 3 | | B1506-816-F0B | Hinged presser foot arm | | 押エ腕 | (1) |
| 4 | | B1515-816-00B | Presser foot set spring (B) | | 押エ腕バネ(B) | (1) |
| 5 | | B1508-816-F0D | Presser foot, rear | | 後押エ | (1) |
| 6 | | B1530-816-D00 | Auxiliary stopper | | 補助止メ板 | (1) |
| 7 | | SS-6060340-SP | . . . Screw | | 補助止メ板止ネジ | (1) |
| 8 | | B3101-704-0B0 | Thread tension spring asm. (red) | | 糸調子バネ結合(赤) | 1 |
| 9 | | B1419-816-FAC | Needle clamp (with needle stopper) | D.6/74 | 針留 | — |
| 9-1 | | B1420-716-F00 | Chain stitch needle clamp | A.6/74 | 二重環針留 | 1 |
| 9-2 | ☆ | SS-8080310-TP | Needle screw | A.10/75 | 針止ネジ | 1 |
| 10 | | R4612-E0F-G00-A | Throat plate | | 針板 | 1 |
| 11 | | B1201-816-00B-A | Crankshaft (B) | | 主軸(B) | 1 |
| 12 | | B1656-816-F0H | Main feed dog | | 主送り歯 | 1 |
| 13 | | B1657-816-F0K | Differential feed dog | | 副送り歯 | 1 |
| 14 | | B4111-804-00A | Upper knife (A) | | 上メス(A) | 1 |
| 15 | | B1121-716-F0C | Chip guard cover | | 布クズカバー | 1 |

## 24. MO-816-FH6

| | | | | | | |
|---|---|---|---|---|---|---|
| 1 | | B1507-816-FAD | Hinged presser foot asm. | | 自由押エ結合 | 1 |
| 2 | | B1507-816-F0D | Hinged presser foot | | 自由押エ | (1) |
| 3 | | B1506-816-F0B | Hinged presser foot arm | | 押エ腕 | (1) |
| 4 | | B1515-816-00B | Presser foot set spring (B) | | 押エ腕バネ(B) | (1) |
| 5 | | B1508-816-F0D | Presser foot, rear | | 後押エ | (1) |
| 6 | | B1530-816-D00 | Auxiliary stopper | | 補助止メ板 | (1) |
| 7 | | SS-6060340-SP | . . . Screw | | 補助止メ板止ネジ | (1) |
| 8 | | B3101-704-0B0 | Thread tension spring asm. (red) | | 糸調子バネ結合(赤) | 1 |
| 9 | | B-1419-816-FAC | Needle clamp (with needle stopper) | D.6/74 | 針留 | — |
| 9-1 | | B1420-716-F00 | Chain stitch needle clamp | A.6/74 | 二重環針留 | 1 |
| 9-2 | ☆ | SS-8080310-TP | Needle screw | A.10/75 | 針止ネジ | 1 |
| 10 | | R4612-E0H-G00 | Throat plate | | 針板 | 1 |
| 11 | | B1201-816-00B-A | Crankshaft (B) | | 主軸(B) | 1 |
| 12 | | B1656-816-F0H | Main feed dog | | 主送り歯 | 1 |
| 13 | | B1657-816-F0K | Differential feed dog | | 副送り歯 | 1 |
| 14 | | B4111-804-00A | Upper knife (A) | | 上メス(A) | 1 |
| 15 | | B1121-716-D0B | Chip guard cover | | 布クズカバー | 1 |

* All parts not mentioned above are same as those of Model MO-816-DD4. 上記以外の部品はMO-816-DD4と共通です。

From the library of: Superior Sewing Machine & Supply LLC

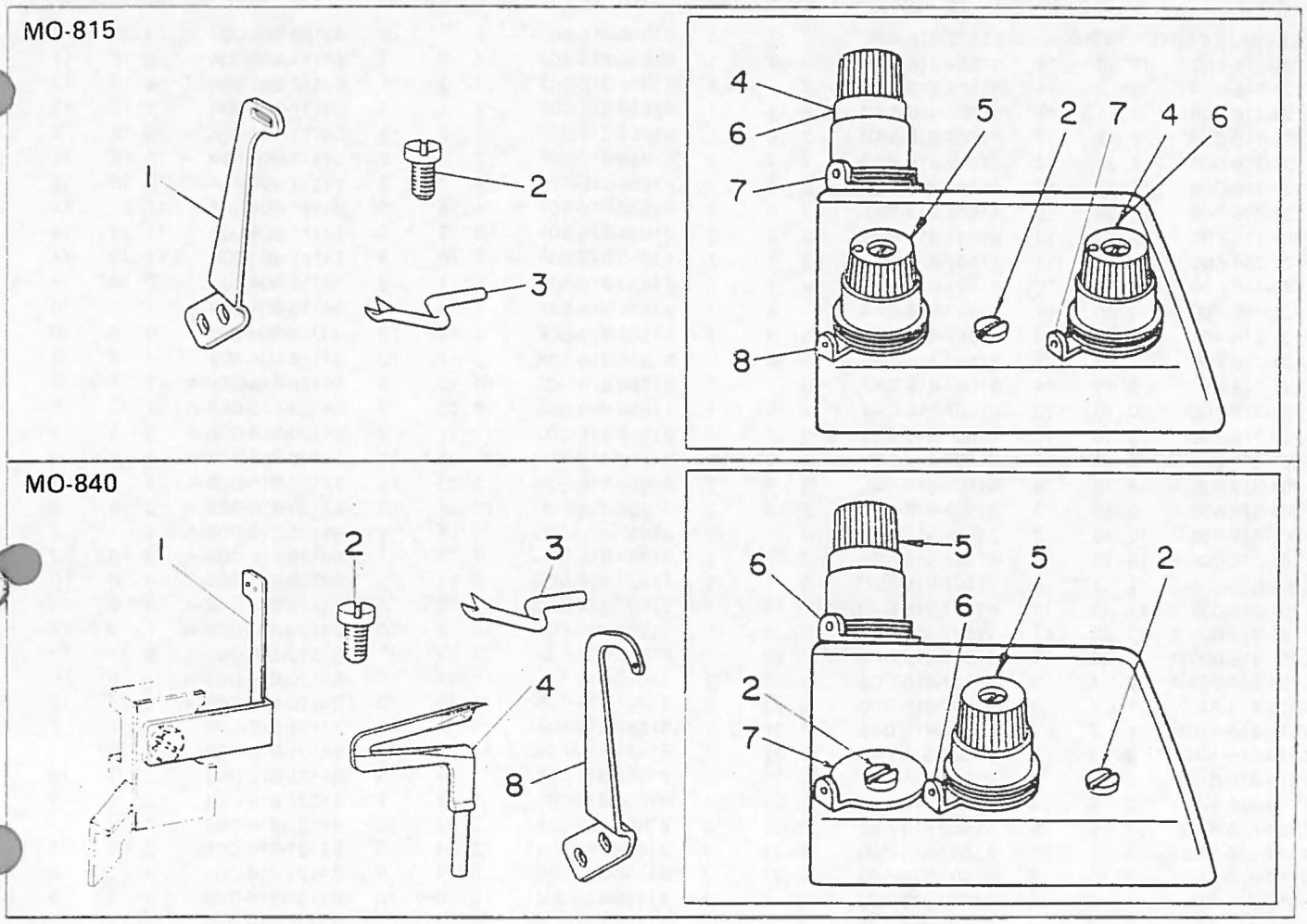


## 25. MO-815

| Ref. No. | Note 注記 | Part No. 品番 | Description | E.C. 変更年月 | 品名 | Amt. Req. 数量 |
|---|---|---|---|---|---|---|
| 1 | | B1428-803-000 | Needle thread take-up lever | | 針糸天秤 | 1 |
| 2 | | SS-7110710-SL | Screw | | 糸調子棒穴蓋止ネジ | 1 |
| 3 | | B2514-803-000 | Upper blind looper | | 上カギルーパー | 1 |
| 4 | | B3102-704-080 | Thread tension spring asm. (yellow) | | 糸調子バネ結合(黄) | 2 |
| 5 | | B3103-704-080 | Thread tension spring asm. (blue) | | 糸調子バネ結合(青) | 1 |
| 6 | 001 | B3101-704-080 | Thread tension spring asm. (red) | | 糸調子バネ結合(赤) | 2 |
| 7 | | B3108-704-000 | Thread tension spring asm. (blue) | | 調子皿糸案内 | 2 |
| 8 | | B3102-816-000 | Tension disc thread guide | | 二重環針糸案内 | 1 |

* All other parts are same as gauge sizes of standard subclass machines of MO-816. この他は同じゲージサイズのMO-816標準サブクラスミシンと同じ

For example: For MO-815-AF4 refer to MO-816-AF4　〔例〕MO-815-AF4はMO-816-AF4参照
MO-815-BD4 refer to MO-816-BD4　MO-815-BD4はMO-816-BD4参照
For all others refer to above examples　其の他上記に準じて参照のこと

## 26. MO-840

| | | | | | | |
|---|---|---|---|---|---|---|
| 1 | | B1435-801-000 | Needle thread take-up lever | | 針糸天秤 | 1 |
| 2 | | SS-7110710-SL | Screw | | 糸調子棒穴蓋ネジ | 2 |
| 3 | | B2514-803-000 | Upper blind looper | | 上カギルーパー | 1 |
| 4 | | B2521-801-000 | Lower blind looper | | 下カギルーパー | 1 |
| 5 | | B3102-704-080 | Thread tension spring asm. (yellow) | | 糸調子バネ結合(黄) | 2 |
| 6 | | B3108-704-000 | Tension disc thread guide | | 調子皿糸案内 | 2 |
| 7 | | B3102-816-000 | Chain looper needle thread guide | | 二重環針糸案内 | 1 |
| 8 | | B1428-801-000 | Needle thread take-up lever | A.10/76 | 針糸天秤 | 1 |

* All parts not mentioned above are same as those of Model MO-816-DD4.　上記以外の部品はMO-816-DD4と共通です

Note 注記 001 ..... For heavy weight materials.　厚物用です。

From the library of: Superior Sewing Machine & Supply LLC

# 27. NUMERICAL INDEX OF PARTS

索 引

| Part No. 品番 | Page 頁 | Item 項目 | Ref. No. |
|---|---|---|---|
| EXCLUSIVE PARTS 専用部品 | | | |
| B1121-716-F0C | 12 | 23 | 15 |
| B1121-716-D0B | 4 | 7 | 11 |
| B1121-716-D0B | 6 | 11 | 11 |
| B1121-716-D0B | 7 | 13 | 3 |
| B1121-716-D0B | 7 | 14 | 3 |
| B1121-716-D0B | 11 | 21 | 12 |
| B1121-716-D0B | 12 | 24 | 15 |
| B1121-716-F0C | 2 | 3 | 13 |
| B1121-716-F0C | 3 | 6 | 11 |
| B1121-716-F0C | 5 | 9 | 10 |
| B1121-716-F0C | 5 | 10 | 11 |
| B1121-716-F0C | 6 | 12 | 3 |
| B1121-716-F0C | 8 | 16 | 14 |
| B1121-716-F0C | 9 | 17 | 14 |
| B1121-716-F0C | 10 | 19 | 12 |
| B1121-716-F0C | 10 | 20 | 12 |
| B1201-816-00B-A | 8 | 15 | 7 |
| B1201-816-00B-A | 8 | 16 | 9 |
| B1201-816-00B-A | 9 | 18 | 3 |
| B1201-816-00B-A | 10 | 19 | 8 |
| B1201-816-00B-A | 10 | 20 | 8 |
| B1201-816-00B-A | 11 | 21 | 8 |
| B1201-816-00B-A | 11 | 22 | 11 |
| B1201-816-00B-A | 12 | 23 | 11 |
| B1201-816-00B-A | 12 | 24 | 11 |
| B1201-816-00B-A | 9 | 17 | 9 |
| B1419-816-AAD | 1 | 1 | 4 |
| B1419-816-AAD | 1 | 2 | 4 |
| B1419-816-AAD | 2 | 3 | 7 |
| B1419-816-BAB | 2 | 4 | 4 |
| B1419-816-BAB | 3 | 5 | 4 |
| B1419-816-BAB | 3 | 6 | 5 |
| B1419-816-BAB | 4 | 7 | 5 |
| B1419-816-BAB | 8 | 15 | 5 |
| B1419-816-CAE | 4 | 8 | 4 |
| B1419-816-CAE | 5 | 9 | 6 |
| B1419-816-CAE | 5 | 10 | 6 |
| B1419-816-CAE | 6 | 11 | 7 |
| B1419-816-CAE | 8 | 16 | 7 |
| B1419-816-CAE | 9 | 17 | 7 |
| B1419-816-FAC | 11 | 22 | 9 |
| B1419-816-FAC | 12 | 24 | 9 |
| B1419-816-FAC | 12 | 23 | 9 |
| B1420-716-A00 | 1 | 1 | 4-1 |
| B1420-716-A00 | 1 | 2 | 4-1 |
| B1420-716-A00 | 2 | 3 | 7-1 |
| B1420-716-B00 | 2 | 4 | 4-1 |
| B1420-716-B00 | 3 | 5 | 4-1 |
| B1420-716-B00 | 3 | 6 | 5-1 |
| B1420-716-B00 | 4 | 7 | 5-1 |
| B1420-716-B00 | 8 | 15 | 5-1 |
| B1420-716-C00 | 4 | 8 | 4-1 |
| B1420-716-C00 | 5 | 9 | 6-1 |
| B1420-716-C00 | 5 | 10 | 6-1 |
| B1420-716-C00 | 6 | 11 | 7-1 |
| B1420-716-C00 | 8 | 16 | 7-1 |
| B1420-716-C00 | 9 | 17 | 7-1 |
| B1420-716-F00 | 11 | 22 | 9-1 |
| B1420-716-F00 | 12 | 23 | 9-1 |
| B1420-716-F00 | 12 | 24 | 9-1 |
| B1428-801-000 | 13 | 26 | 8 |
| B1428-803-000 | 13 | 25 | 1 |
| B1435-801-000 | 13 | 26 | 1 |
| B1506-816-F0B | 11 | 22 | 3 |
| B1506-816-F0B | 12 | 23 | 3 |
| B1506-816-F0B | 12 | 24 | 3 |
| B1507-816-AAA | 1 | 2 | 1 |
| B1507-816-AAB | 1 | 1 | 1 |
| B1507-816-AAE | 2 | 3 | 1 |
| B1507-816-A0A | 1 | 2 | 2 |
| B1507-816-A0B | 1 | 1 | 2 |
| B1507-816-A0E | 2 | 3 | 2 |
| B1507-816-BAA | 2 | 4 | 1 |
| B1507-816-BAC | 3 | 5 | 1 |
| B1507-816-BAC | 8 | 15 | 1 |
| B1507-816-BAD | 3 | 6 | 1 |
| B1507-816-BAD | 4 | 7 | 1 |
| B1507-816-B0A | 2 | 4 | 2 |
| B1507-816-B0C | 3 | 5 | 2 |
| B1507-816-B0C | 8 | 15 | 2 |
| B1507-816-B0D | 3 | 6 | 2 |
| B1507-816-B0D | 4 | 7 | 2 |
| B1507-816-CAA | 4 | 8 | 1 |
| B1507-816-CAJ | 5 | 9 | 1 |
| B1507-816-CAJ | 5 | 10 | 1 |
| B1507-816-CAJ | 6 | 11 | 1 |
| B1507-816-CAJ | 8 | 16 | 1 |
| B1507-816-CAJ | 9 | 17 | 1 |
| B1507-816-C0A | 4 | 8 | 2 |
| B1507-816-C0J | 5 | 9 | 2 |
| B1507-816-C0J | 5 | 10 | 2 |
| B1507-816-C0J | 6 | 11 | 2 |
| B1507-816-C0J | 8 | 16 | 2 |
| B1507-816-C0J | 9 | 17 | 2 |
| B1507-816-DAB | 10 | 19 | 1 |
| B1507-816-DAB | 11 | 21 | 1 |
| B1507-816-DAB | 10 | 20 | 1 |
| B1507-816-D0B | 10 | 19 | 2 |
| B1507-816-D0B | 10 | 20 | 2 |
| B1507-816-D0B | 11 | 21 | 2 |
| B1507-816-FAD | 11 | 22 | 1 |
| B1507-816-FAD | 12 | 23 | 1 |
| B1507-816-FAD | 12 | 24 | 1 |
| B1507-816-F0D | 11 | 22 | 2 |
| B1507-816-F0D | 12 | 23 | 2 |
| B1507-816-F0D | 12 | 24 | 2 |
| B1508-816-A0E | 1 | 1 | 3 |
| B1508-816-A0E | 1 | 2 | 3 |
| B1508-816-A0E | 2 | 3 | 3 |
| B1508-816-B0C | 2 | 4 | 3 |
| B1508-816-B0C | 3 | 5 | 3 |
| B1508-816-B0C | 8 | 15 | 3 |
| B1508-816-B0F | 3 | 6 | 3 |
| B1508-816-B0F | 4 | 7 | 3 |
| B1508-816-C0A | 4 | 8 | 3 |
| B1508-816-C0A | 8 | 16 | 3 |
| B1508-816-C0F | 5 | 10 | 3 |
| B1508-816-C0F | 9 | 17 | 3 |
| B1508-816-C0F | 5 | 9 | 3 |
| B1508-816-C0F | 6 | 11 | 3 |
| B1508-816-C0F | 8 | 16 | 3 |
| B1508-816-D0B | 10 | 19 | 3 |
| B1508-816-D0B | 10 | 20 | 3 |
| B1508-816-D0B | 11 | 21 | 3 |
| B1508-816-F0D | 11 | 22 | 5 |
| B1508-816-F0D | 12 | 23 | 5 |
| B1508-816-F0D | 12 | 24 | 5 |
| B1515-816-00B | 11 | 22 | 4 |
| B1515-816-00B | 12 | 23 | 4 |
| B1515-816-00B | 12 | 24 | 4 |
| B1530-816-D00 | 2 | 3 | 4 |
| B1530-816-D00 | 4 | 7 | 2-1 |
| B1530-816-D00 | 5 | 9 | 4 |
| B1530-816-D00 | 5 | 10 | 4 |
| B1530-816-D00 | 6 | 11 | 4 |
| B1530-816-D00 | 8 | 16 | 4 |
| B1530-816-D00 | 9 | 17 | 4 |
| B1530-816-D00 | 10 | 19 | 4 |
| B1530-816-D00 | 10 | 20 | 4 |
| B1530-816-D00 | 11 | 21 | 4 |
| B1530-816-D00 | 11 | 22 | 6 |
| B1530-816-D00 | 12 | 23 | 6 |
| B1530-816-D00 | 12 | 24 | 6 |
| B1656-816-B0F | 1 | 1 | 8 |
| B1656-816-B0F | 1 | 2 | 8 |
| B1656-816-B0F | 2 | 3 | 11 |
| B1656-816-B0F | 2 | 4 | 8 |
| B1656-816-B0F | 3 | 5 | 8 |
| B1656-816-B0F | 3 | 6 | 9 |
| B1656-816-B0F | 4 | 7 | 9 |
| B1656-816-B0F | 4 | 8 | 6 |
| B1656-816-B0F | 5 | 9 | 8 |
| B1656-816-B0F | 5 | 10 | 9 |
| B1656-816-B0F | 6 | 11 | 9 |
| B1656-816-B0F | 8 | 15 | 8 |
| B1656-816-B0F | 8 | 16 | 10 |
| B1656-816-B0F | 9 | 17 | 10 |
| B1656-816-D0J | 10 | 19 | 9 |
| B1656-816-D0J | 10 | 20 | 9 |
| B1656-816-D0J | 11 | 21 | 9 |
| B1656-816-F0H | 11 | 22 | 12 |
| B1656-816-F0H | 12 | 23 | 12 |
| B1656-816-F0H | 12 | 24 | 12 |
| B1657-816-D0G | 8 | 15 | 9 |
| B1657-816-D0G | 8 | 16 | 11 |
| B1657-816-D0G | 9 | 17 | 11 |
| B1657-816-D0G | 9 | 18 | 4 |
| B1657-816-F0K | 10 | 19 | 10 |
| B1657-816-F0K | 10 | 20 | 10 |
| B1657-816-F0K | 11 | 21 | 10 |
| B1657-816-F0K | 11 | 22 | 13 |
| B1657-816-F0K | 12 | 23 | 13 |
| B1657-816-F0K | 12 | 24 | 13 |
| B1658-816-00B | 1 | 1 | 9 |
| B1658-816-00B | 1 | 2 | 9 |
| B1658-816-00B | 2 | 3 | 12 |
| B1658-816-00B | 2 | 4 | 9 |
| B1658-816-00B | 3 | 5 | 9 |
| B1658-816-00B | 3 | 6 | 10 |
| B1658-816-00B | 4 | 7 | 10 |
| B1658-816-00B | 4 | 8 | 7 |
| B1658-816-00B | 5 | 9 | 9 |
| B1658-816-00B | 5 | 10 | 10 |
| B1658-816-00B | 6 | 11 | 10 |
| B1658-816-00B | 8 | 15 | 10 |
| B1658-816-00B | 8 | 16 | 12 |
| B1658-816-00B | 9 | 17 | 12 |
| B2521-801-000 | 13 | 26 | 4 |
| B2514-803-000 | 13 | 25 | 3 |
| B2514-803-000 | 13 | 26 | 3 |
| B3101-704-0B0 | 2 | 3 | 6 |
| B3101-704-0B0 | 3 | 6 | 4 |
| B3101-704-0B0 | 4 | 7 | 4 |
| B3101-704-0B0 | 5 | 10 | 7 |
| B3101-704-0B0 | 6 | 12 | 1 |
| B3101-704-0B0 | 7 | 13 | 1 |
| B3101-704-0B0 | 7 | 14 | 1 |
| B3101-704-0B0 | 8 | 16 | 6 |
| B3101-704-0B0 | 9 | 17 | 6 |
| B3101-704-0B0 | 9 | 18 | 1 |
| B3101-704-0B0 | 10 | 19 | 6 |
| B3101-704-0B0 | 10 | 20 | 6 |
| B3101-704-0B0 | 11 | 21 | 6 |
| B3101-704-0B0 | 11 | 22 | 8 |
| B3101-704-0B0 | 12 | 23 | 8 |
| B3101-704-0B0 | 12 | 24 | 8 |
| B3101-704-0B0 | 13 | 25 | 6 |
| B3101-704-000 | 6 | 11 | 6 |
| B3101-704-0B0 | 8 | 15 | 4 |
| B3102-704-0B0 | 13 | 25 | 4 |
| B3102-704-0B0 | 13 | 26 | 5 |
| B3102-816-000 | 13 | 25 | 8 |
| B3102-816-000 | 13 | 26 | 7 |
| B3103-704-0B0 | 13 | 25 | 5 |
| B3108-704-000 | 13 | 25 | 7 |
| B3108-704-000 | 13 | 26 | 6 |
| B4111-804-00A | 8 | 15 | 11 |
| B4111-804-00A | 8 | 16 | 13 |
| B4111-804-00A | 9 | 17 | 13 |
| B4111-804-00A | 9 | 18 | 5 |
| B4111-804-00A | 10 | 19 | 11 |
| B4111-804-00A | 10 | 20 | 11 |
| B4111-804-00A | 11 | 21 | 11 |
| B4111-804-00A | 11 | 22 | 14 |
| B4111-804-00A | 12 | 23 | 14 |
| B4111-804-00A | 2 | 24 | 14 |
| B4118-804-000 | 1 | 1 | 10 |
| B4118-804-000 | 2 | 4 | 10 |
| B4118-804-000 | 4 | 8 | 8 |
| B4120-816-D0B-A | 1 | 1 | 6 |
| B4120-816-D0B-A | 1 | 2 | 6 |
| B4120-816-D0B-A | 2 | 3 | 9 |
| B4120-816-D0B-A | 2 | 4 | 6 |
| B4120-816-D0B-A | 3 | 5 | 6 |
| B4120-816-D0B-A | 3 | 6 | 7 |
| B4120-816-D0B-A | 4 | 7 | 7 |
| B4120-816-D0B-A | 8 | 15 | 12 |
| B4120-816-D0B-A | 4 | 8 | 10 |
| B4120-816-D0B-A | 5 | 9 | 12 |
| B4120-816-D0B-A | 5 | 10 | 13 |
| B4120-816-D0B-A | 6 | 11 | 13 |
| B4120-816-D0B-A | 8 | 16 | 16 |
| B4120-816-D0B-A | 9 | 17 | 16 |
| B4121-816-D0B | 1 | 1 | 7 |
| B4121-816-D0B | 1 | 2 | 7 |
| B4121-816-D0B | 2 | 3 | 10 |
| B4121-816-D0B | 2 | 4 | 7 |
| B4121-816-D0B | 3 | 5 | 7 |
| B4121-816-D0B | 3 | 6 | 8 |
| B4121-816-D0B | 4 | 7 | 8 |
| B4121-816-D0B | 4 | 8 | 9 |
| B4121-816-D0B | 5 | 9 | 11 |
| B4121-816-D0B | 5 | 10 | 12 |
| B4121-816-D0B | 6 | 11 | 12 |
| B4121-816-D0B | 8 | 16 | 15 |
| B4121-816-D0B | 9 | 17 | 15 |
| B4121-816-D0B | 8 | 15 | 13 |
| R4504-E0B-C00 | 1 | 1 | 5 |
| R4504-E0D-C00 | 1 | 2 | 5 |
| R4504-E0F-C00 | 2 | 3 | 8 |
| R4505-E0B-C00 | 2 | 4 | 5 |
| R4505-E0D-C00 | 3 | 5 | 5 |
| R4505-E0F-C00 | 3 | 6 | 6 |
| R4505-E0H-C00 | 4 | 7 | 6 |
| R4506-E0C-C00 | 4 | 8 | 5 |
| R4506-E0E-C00 | 5 | 9 | 7 |
| R4506-E0F-C00 | 5 | 10 | 8 |
| R4506-E0H-C00 | 6 | 11 | 8 |
| R4508-E0F-C00 | 6 | 12 | 2 |
| R4508-E0G-C00 | 7 | 13 | 2 |
| R4508-E0H-C00 | 7 | 14 | 2 |
| R4605-E0D-F00 | 8 | 15 | 6 |
| R4606-E0E-F00 | 8 | 16 | 8 |
| R4606-E0F-F00 | 9 | 17 | 8 |
| R4608-E0D-F00 | 9 | 18 | 2 |
| R4608-E0E-G00 | 10 | 19 | 7 |
| R4608-E0F-G00 | 10 | 20 | 7 |
| R4608-E0H-G00-A | 11 | 21 | 7 |
| R4612-E0D-G00 | 11 | 22 | 10 |
| R4612-E0F-G00-A | 12 | 23 | 10 |
| R4612-E0H-G00 | 12 | 24 | 10 |
| SCREW ネジ | | | |
| SS-6060340-SP | 2 | 3 | 5 |
| SS-6060340-SP | 4 | 7 | 2-2 |
| SS-6060340-SP | 5 | 9 | 5 |
| SS-6060340-SP | 5 | 10 | 5 |

From the library of: Superior Sewing Machine & Supply LLC

| Part No. 品番 | Page 頁 | Item 項目 | Ref. No. |
|---|---|---|---|
| SS-6060340-SP | 6 | 11 | 5 |
| SS-6060340-SP | 8 | 16 | 5 |
| SS-6060340-SP | 9 | 17 | 5 |
| SS-6060340-SP | 10 | 19 | 5 |
| SS-6060340-SP | 10 | 20 | 5 |
| SS-6060340-SP | 11 | 21 | 5 |
| SS-6060340-SP | 11 | 22 | 7 |
| SS-6060340-SP | 12 | 23 | 7 |
| SS-6060340-SP | 12 | 24 | 7 |
| SS-7110710-SL | 13 | 25 | 2 |
| SS-7110710-SL | 13 | 26 | 2 |
| SS-8080310-TP | 11 | 22 | 9-2 |
| SS-8080310-TP | 12 | 23 | 9-2 |
| SS-8080310-TP | 12 | 24 | 9-2 |

# MO-816

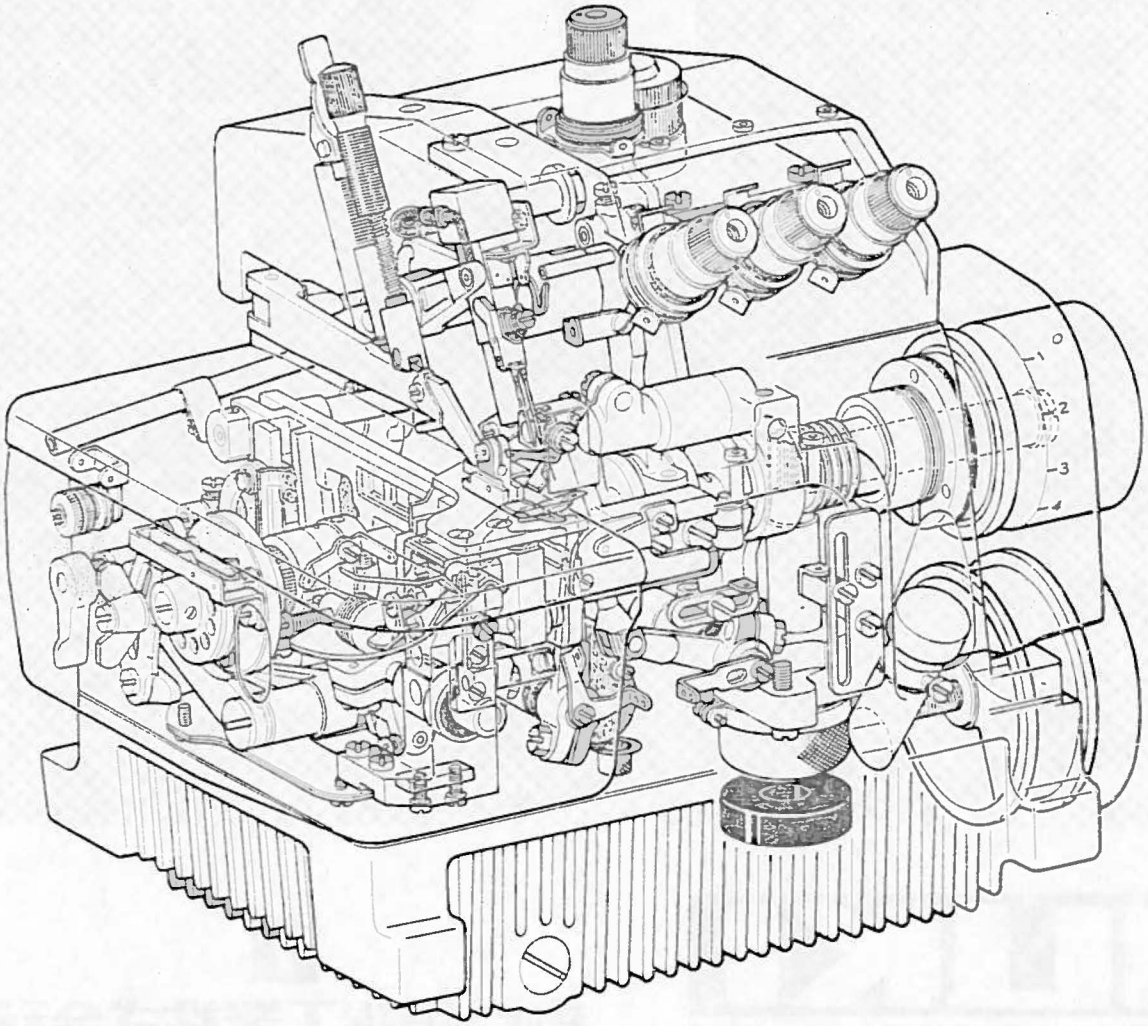


From the library of: Superior Sewing Machine & Supply LLC

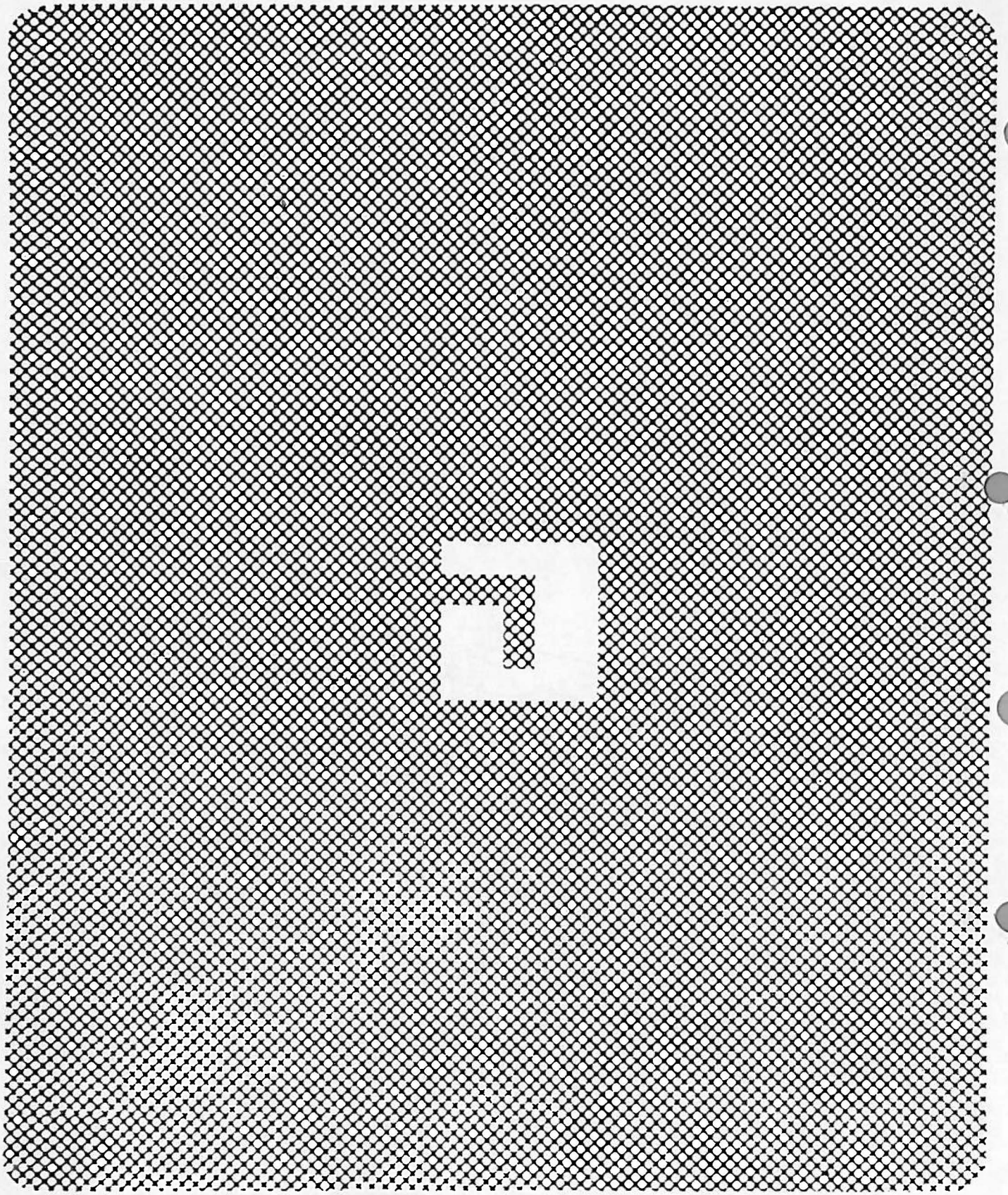

JUKI®

TOKYO JUKI INDUSTRIAL CO., LTD.

Address : 23-3, Kabuki-cho 1-chome, Shinjuku-ku,
Tokyo 160, Japan
Cable : JUKI TOKYO
Telex : 22967, 232-2301
Phone : 03 (205) 1188, 1189, 1190

東京重機工業株式会社

〒182
本 社・東京都調布市国領町8の2の1 TEL(480)1111(大代)

From the library of: Superior Sewing Machine & Supply LLC

Printed in Japan (T)